5000 series

L5087MKA70E

Features

- CameraLink supports Full, Medium, Base and Deca mode with maximum 6.8Gbps bandwidth;
- Supports external trigger, free run mode and multiple modes;
- Supports Gamma correction, LUT and other ISP functions;
- Applies DC 24V power supply;
- Compatible with Cameralink protocol and GenICam standard;
- Comply with CE, UL, RoHS certifications.

Dimensions (mm)

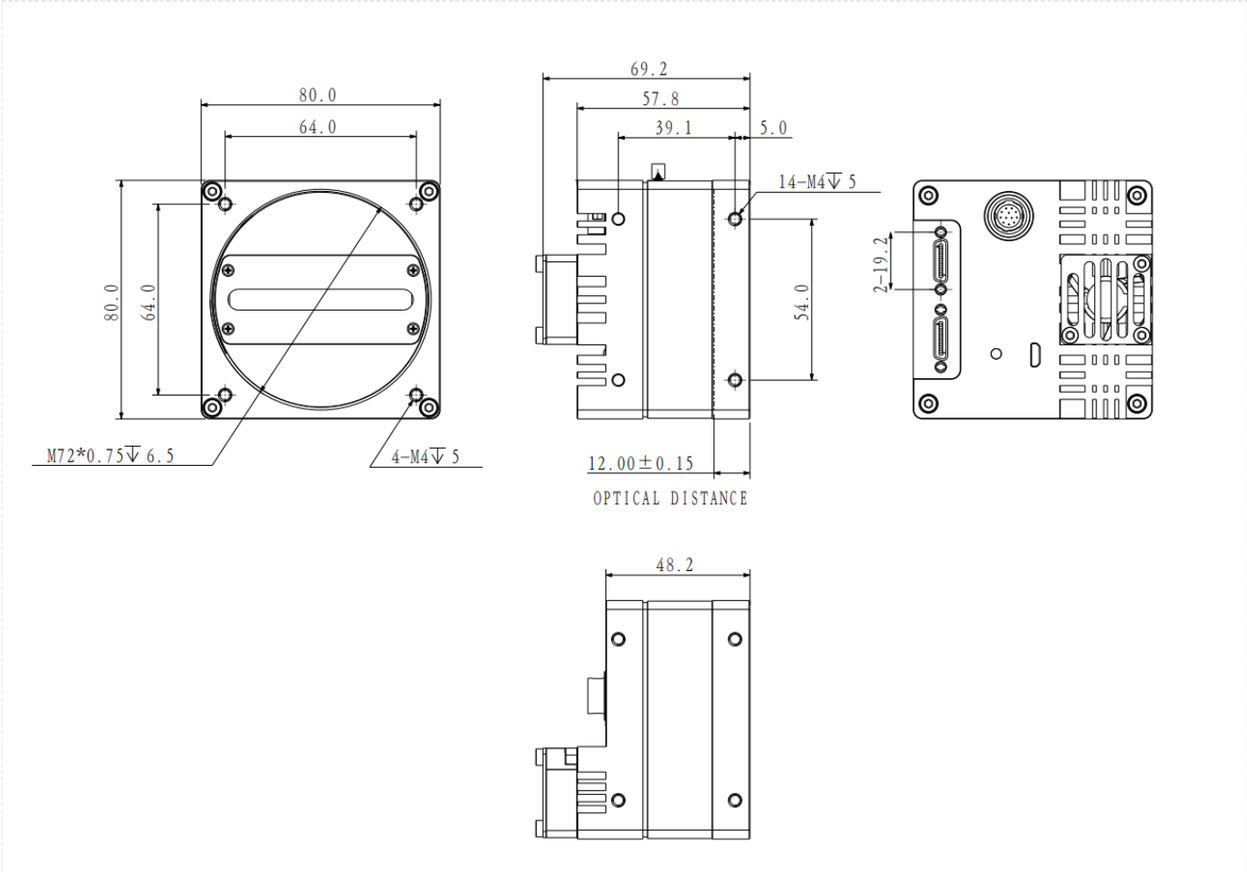

Specification

Model		L5087MKA70E
Basic	Sensor	8 K
	Image Sensor	CMOS
	Shutter	Global
	Resolution	8192 × 4
	Line Rate	100 kHz
	Bit Depth	10
	Mono/Color	Mono
	Pixel Size	5 μm × 5 μm
Image	Pixel	8192×4
	S/N Ratio	40 dB
	Dynamic Range	62 dB
	Image Format	Mono8/10
	ROI	Support
	X Flip	Support
	Gain	1~32
	Gamma	From 0 to 4，support LUT
	Exposure Time	3 μS~100 mS
	Trigger Mode	Software Trigger/Hardware Trigger/Free Run Mode
	FPN	Support
	TDI Stages	single_line，2TDI，4TDI
Performance	User Setting	Support two sets of user-defined configurations
	Pixel Clock	34 51 68 85MHz
Port	Port	CameraLink,use to camera control and data transmission, support base, medium, full mode.
	GPIO Interface	4 differential input, output, and 1 GPIO input, output,
	Lens Mount	M72
Power	Power Supply	DC 12~24V power supply via 12-pin Hirose connector
	Power Consumption	11.5 W
Structure	Product Dimensions	80 mm×80 mm×57.8 mm(Not including rear case connector)
	Net Weight	520 g
Environment	Storage Temperature	-30℃~+80℃
	Operating Temperature	-30℃~+50℃

Connector Pin-out

Color	Pin	Signal	Input/output	Specifications	
				Differential mode	Single-ended mode
	1	GND	-	Power GND	
	2	VIN	-	Camera Power Supply	
	3	LINE1+	Input/output	Configurable Input/output	Configurable Input/output
	4	LINE1-	Input/output	Configurable Input/output	Suspended (not connected)
	5	GND	-	Signal GND	
	6	LINE2+	Input/output	Configurable Input/output	Configurable Input/output
	7	LINE2-	Input/output	Configurable Input/output	Suspended (not connected)
	8	GPIO	Input/output	non-isolated configurable I/O	
	9	LINE3+	Input/output	Configurable Input/output	Configurable Input/output
	10	LINE3-	Input/output	Configurable Input/output	Suspended (not connected)
	11	LINE4+	Input/output	Configurable Input/output	Configurable Input/output
	12	LINE4-	Input/output	Configurable Input/output	Suspended (not connected)
	Shell	Shield GND	Shell	Connected to the encoder shield	
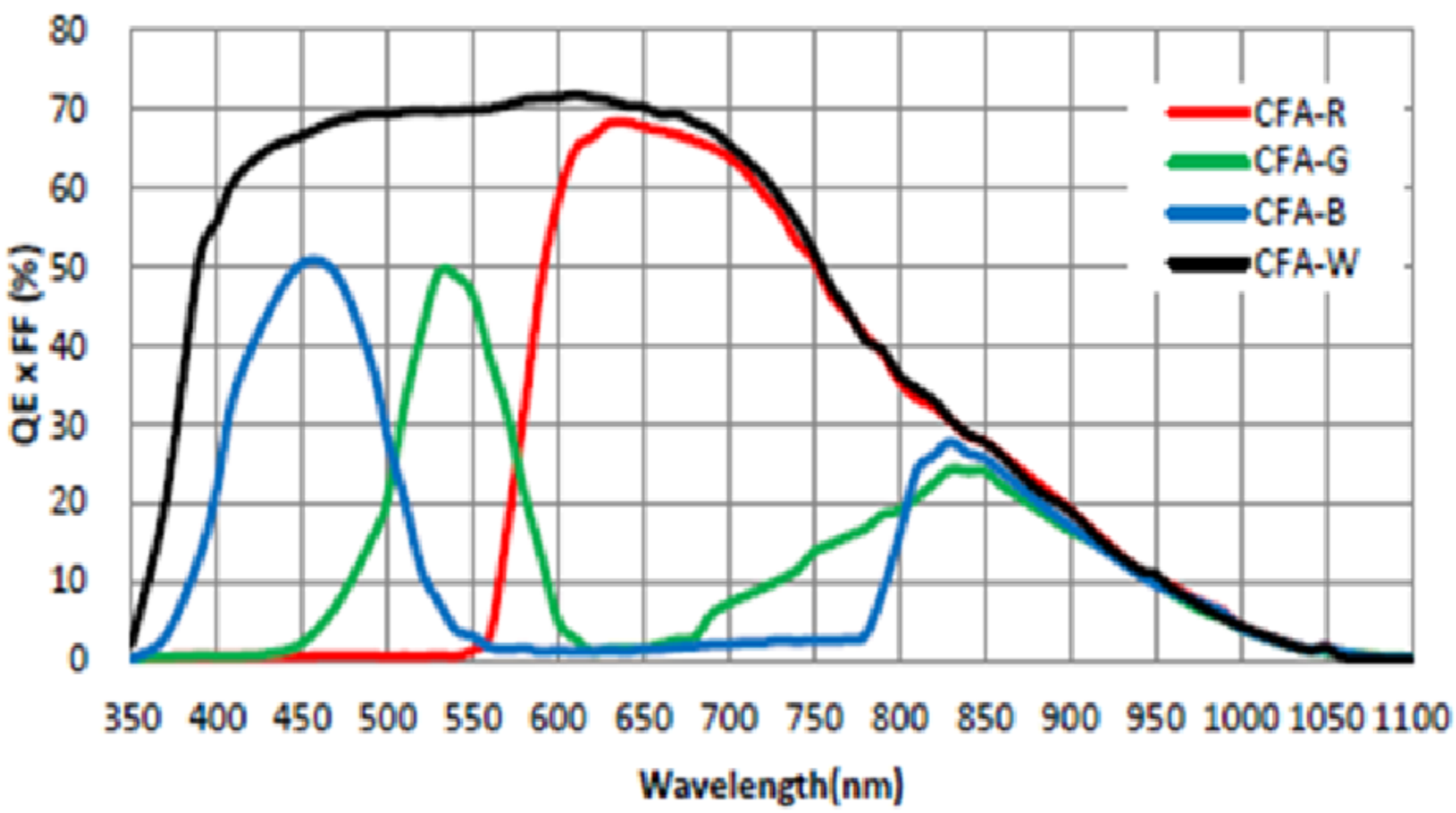
Spectrogram