5000 series

L5162MK170E

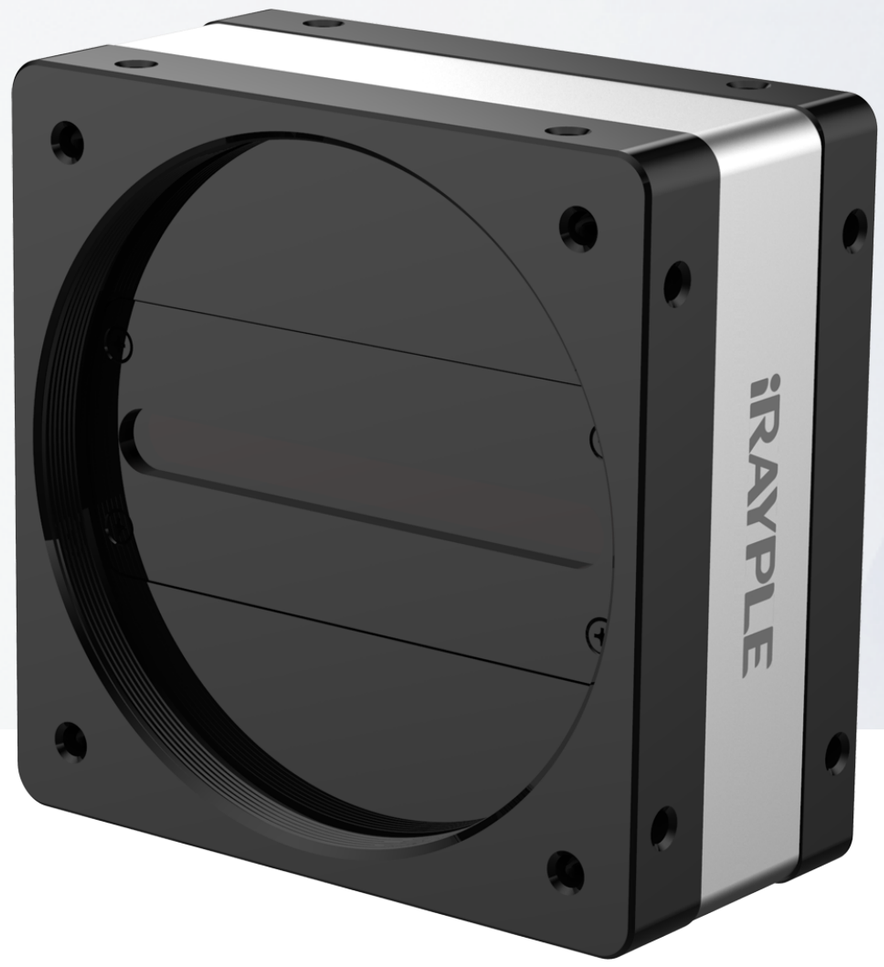

Features

- CameraLink supports Full, Medium, Base and Deca mode with maximum 6.8Gbps bandwidth;
- Supports external trigger, free run mode and multiple modes;
- Supports Gamma correction, LUT and other ISP functions;
- Applies DC 24V power supply;
- Compatible with Cameralink protocol and GenICam standard;
- Comply with CE, UL, RoHS certifications.

Dimensions (mm)

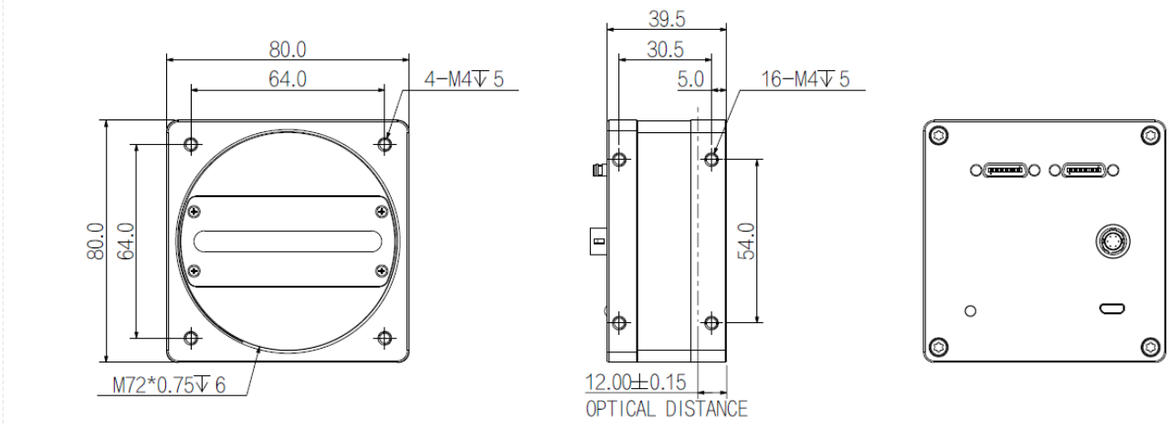

Specification

Model		L5162MK170E
Basic	Sensor	16 K
	Image Sensor	CMOS
	Shutter	Global
	Resolution	16384 × 1
	Line Rate	50 kHz
	Bit Depth	12
	Mono/Color	Mono
	Pixel Size	3.5 μm × 3.5 μm
Image	Pixel	16384 × 1
	S/N Ratio	44 dB
	Dynamic Range	64 dB
	Image Format	Mono8/10
	Binning	Support
	ROI	Support
	X Flip	Support
	Gain	1~32
	Gamma	From 0 to 4，support LUT
	Exposure Time	3 μs~100 ms
	Trigger Mode	Software Trigger/Hardware Trigger/Free Run Mode
	FPN	Support
Performance	User Setting	Support two sets of user-defined configurations
	Pixel Clock	34/51/68/85MHz
Port	Port	CameraLink
	Lens Mount	M72
Power	Power Supply	DC12~24V power supply
	Power Consumption	6 W
Structure	Product Dimensions	80 mm × 80 mm × 39.5 mm (Not including rear case connector)
	Net Weight	360 g
Environment	Storage Temperature	-30℃~+80℃
	Operating Temperature	-30℃~+50℃

Connector Pin-out

Definitions of camera 6-pin ports:

Pin	Description	Features
1	Power	+12VDC to 24VDC power supply
2		not connected
3		
4		
5		
6	GND	Camera DC power ground

Definition of 6-pin power port

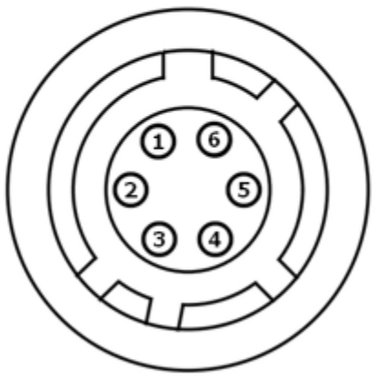
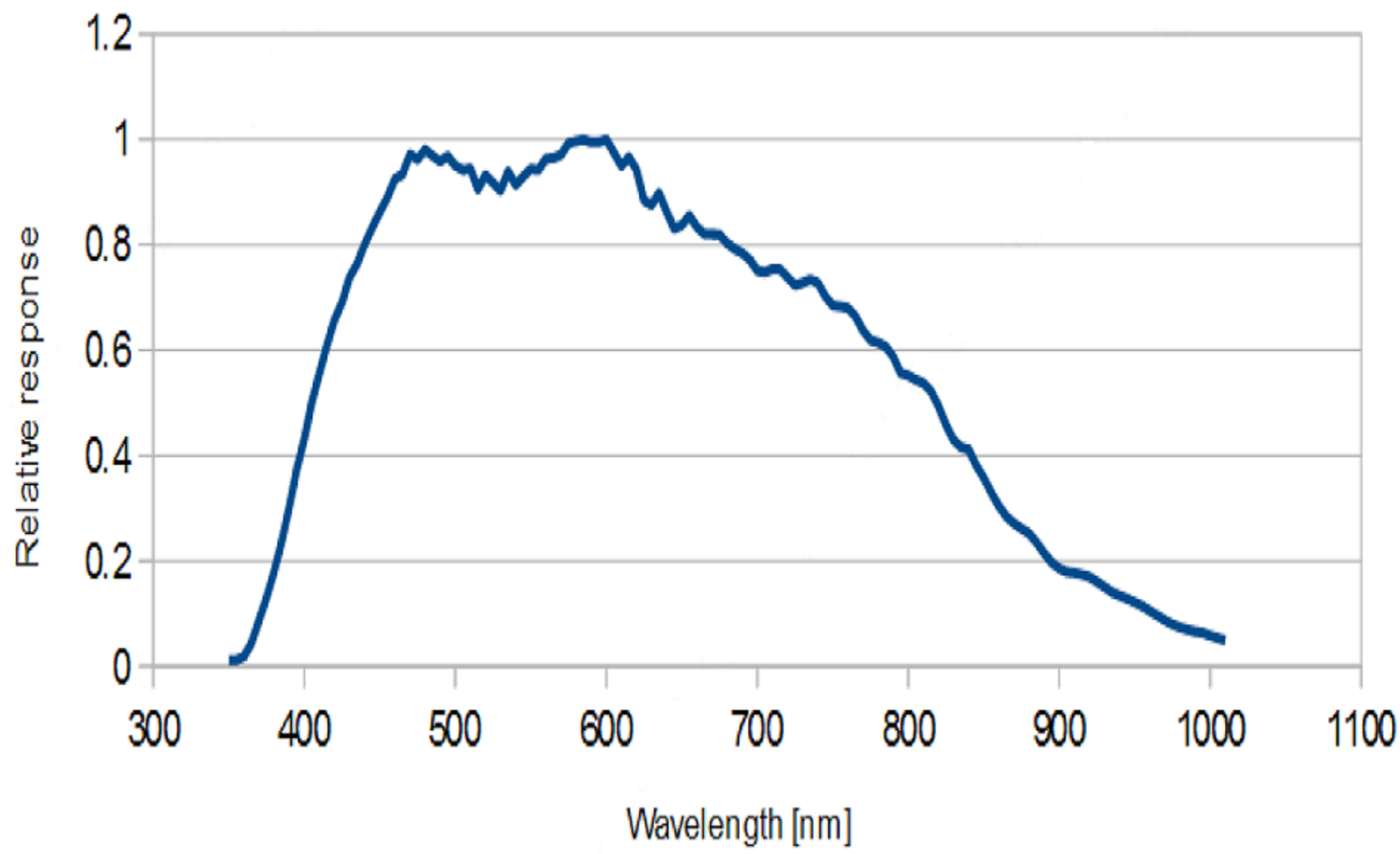
Spectrogram