5000 series

L5082MG170E

Features

- Support brightness enhancement, gamma correction, LUT and other ISP functions;
- Support PRNU correction in target bright field;
- Support various image formats of output data;
- Support DC12~24V wide-range power supply;
- Conform to CE, UL, RoHS certifications;

Dimensions (mm)

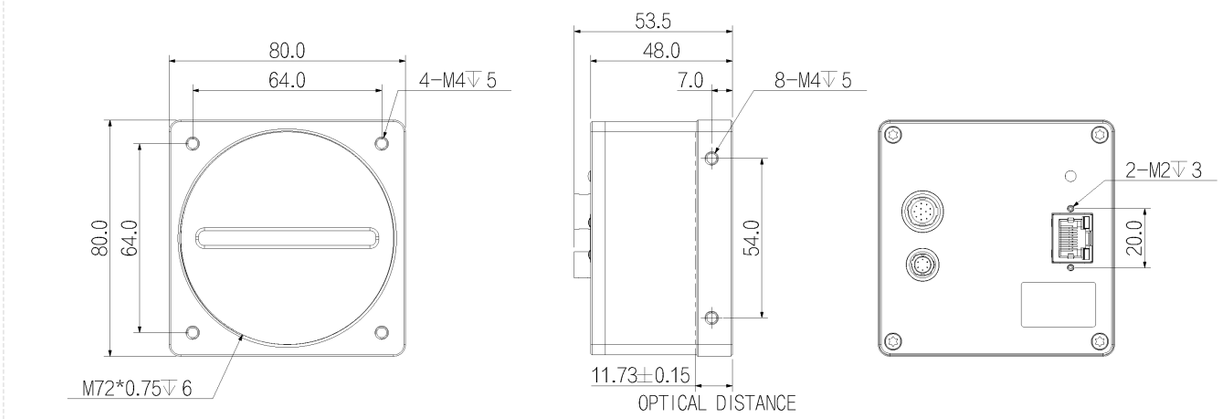

Specification

Model		L5082MG170E
Basic	Sensor	8 K
	Image Sensor	CMOS
	Shutter	Global
	Resolution	8192 × 1
	Line Rate	13 kHz(After compression the line frequency is 58k)
	Bit Depth	12
	Mono/Color	Mono
	Pixel Size	7 μm × 7 μm
Image	S/N Ratio	46dB
	Dynamic Range	65.9 dB
	Sensitivity	77
	Image Format	Mono8/10/12/10Packed/12Packed
	ROI	Support
	X Flip	Support
	Gain	1~32
	Gamma	From 0 to 4，support LUT
	Exposure Time	2 μs~100 ms
	Trigger Mode	Software Trigger/Hardware Trigger/Free Run Mode
	FPN	Support
Performance	User Setting	Support two sets of user-defined configurations
	Image Buffer	512MB data cache
Port	Port	GigE
	GPIO Interface	2 differential/single-end input, 2 differential/single-end output, 1 differential/single-end configurable input/output and 1 GPIO.
	Lens Mount	M72 x 0.75
Power	Power Supply	DC 12~24V power supply via 6-pin Hirose connector
	Power Consumption	12 V ≈ 4.5 W
Structure	Product Dimensions	80mm×80mm×48mm(Not including rear case connector)
	Net Weight	390 g
Environment	Storage Temperature	-30℃~+80℃
	Operating Temperature	0℃~+50℃

Connector Pin-out

Port definitions of 12-pin signals:

1	line1_in-	RS422 input -
2	line1_in+	RS422 input +/single-ended input
3	line3_inout-	RS422 input and output -
4	line3_inout+	RS422 input and output +/single-ended input and output
5	signal ground	Signal GND
6	Line5_out-	RS422 output -
7	Line5_out+	RS422 output +/single-ended output
8	Line2_in-	RS422 input -
9	Line2_in+	RS422 input +/single-ended input
10	Line4_GPIO	Single-ended input/output
11	Line6_out-	RS422 output -
12	Line6_out+	RS422 output +/single-ended output

Port definitions of 12-pin signals

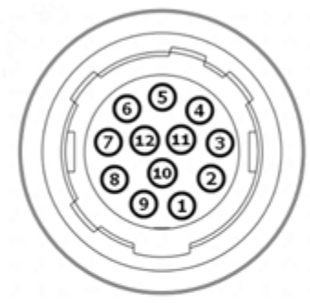

Definition of 6-pin power port:

Pin	Signal	Features
1 2	Power	+12 VDC to +24 VDC power supply of the camera
3 4	-	Not connected
5 6	GND	DC power GND

Definition of 6-pin power port

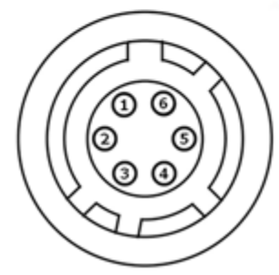
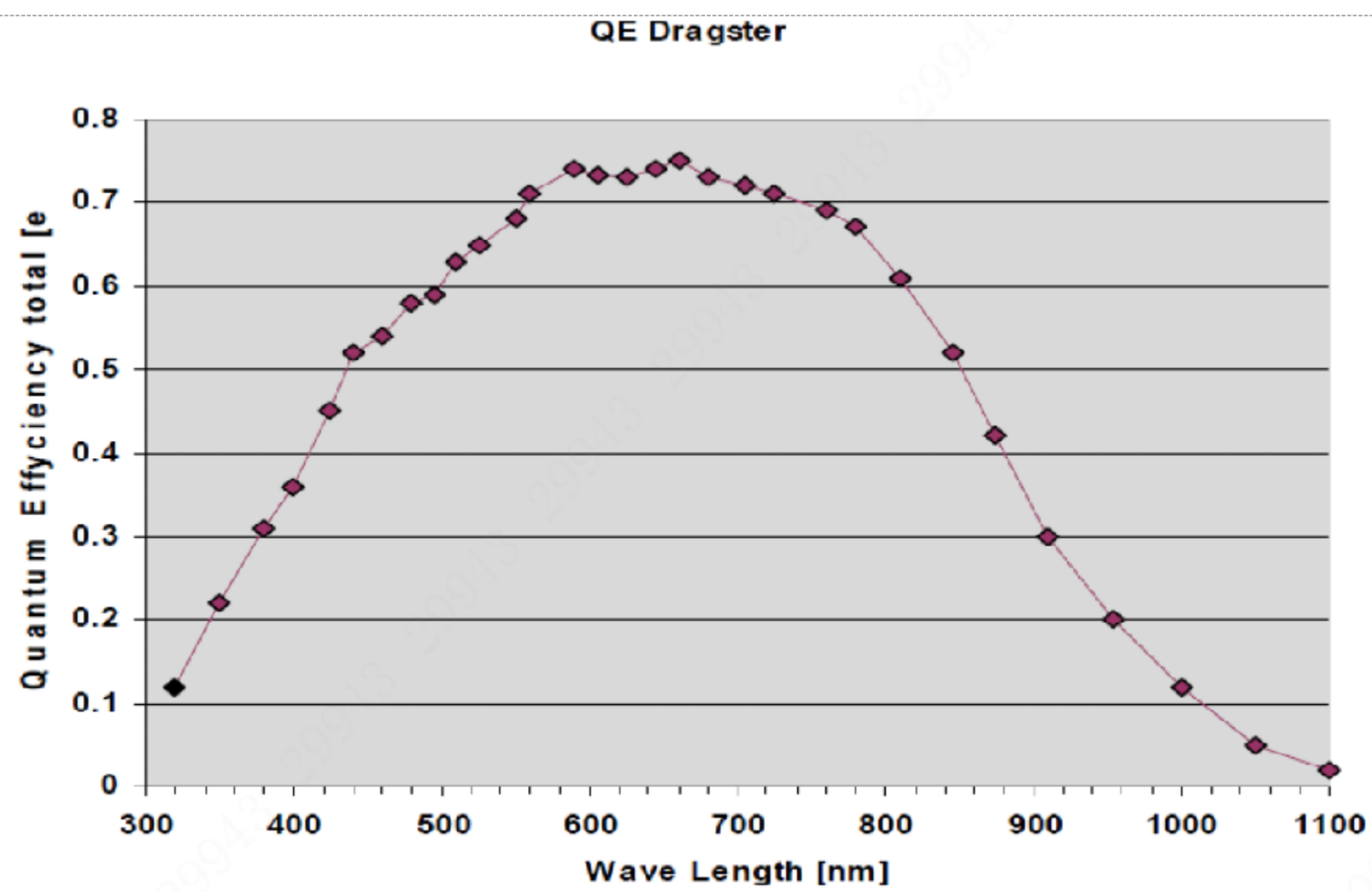
Spectrogram