5000 series

L5047MG140E

Features

- Support brightness enhancement, gamma correction, LUT and other ISP functions;
- Support PRNU correction in target bright field;
- Support various image formats of output data;
- Support DC12~24V wide-range power supply;
- Conform to CE, UL, RoHS certifications;

Dimensions (mm)

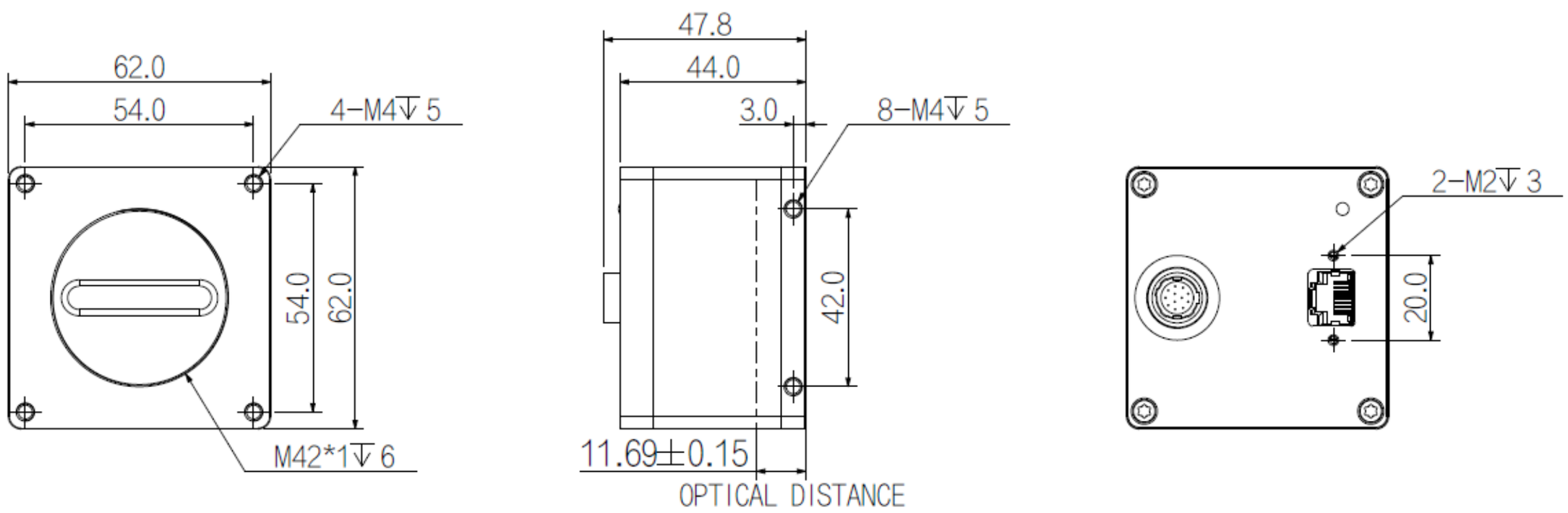

Specification

Model		L5047MG140E
Basic	Sensor	4K
	Image Sensor	CMOS
	Shutter	Global
	Resolution	4096 × 2
	Line Rate	28 kHz(After compression the line frequency is 59.9k)
	Bit Depth	12
	Mono/Color	Mono
	Pixel Size	7 μm × 7 μm
Image	S/N Ratio	>39dB
	Dynamic Range	66dB
	Image Format	Mono8/10/12/10Packed/12Packed
	ROI	Support
	X Flip	Support
	Gain	1~32
	Gamma	From 0 to 4，support LUT
	Exposure Time	8μs~100ms
	Trigger Mode	Software Trigger/Hardware Trigger/Free Run Mode
	FPN	Support
	TDI Stages	single_line，2TDI
Performance	User Setting	Support two sets of user-defined configurations
	Image Buffer	64MB image cache，64MB data cache
Port	Port	GigE
	GPIO Interface	12-pin Hirose interface for external power supply and external triggering; 2 differential/single-ended inputs, 1 differential configurable input or output, 1 high-speed optocoupler single-ended input, 1 GPIO configurable input or output
	Lens Mount	M42 x 1
Power	Power Supply	DC 12~24V power supply via 12-pin Hirose connector
	Power Consumption	≈4.5W
Structure	Product Dimensions	62 mm × 62 mm × 44 mm (Not including rear case connector)
	Net Weight	245 g
Environment	Storage Temperature	-30℃~+80℃
	Operating Temperature	0℃~+50℃

Connector Pin-out

Port definitions of 12-pin signals:

Pin	Description	Features
1	Power GND	Power ground
2	Camera Power	Power Supply
3	IN Line1+	Input Line1+
4	IN Line1-	Input Line1-
5	Signal GND	Signal ground
6	IN Line2+	Input Line2+
7	IN Line2-	Input Line2-
8	IN Line4	Bidirectional GPIO Line4
9	IN/OUT Line3+	Configurable input/output Line3+
10	IN/OUT Line3-	Configurable input/output Line3-
11	OPT_IN Line5	Opto-isolated input Line5
12	OPT GND	Opto-isolated ground point

Port definitions of 12-pin signals

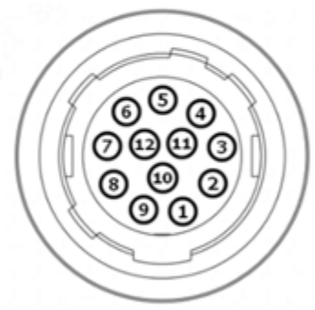
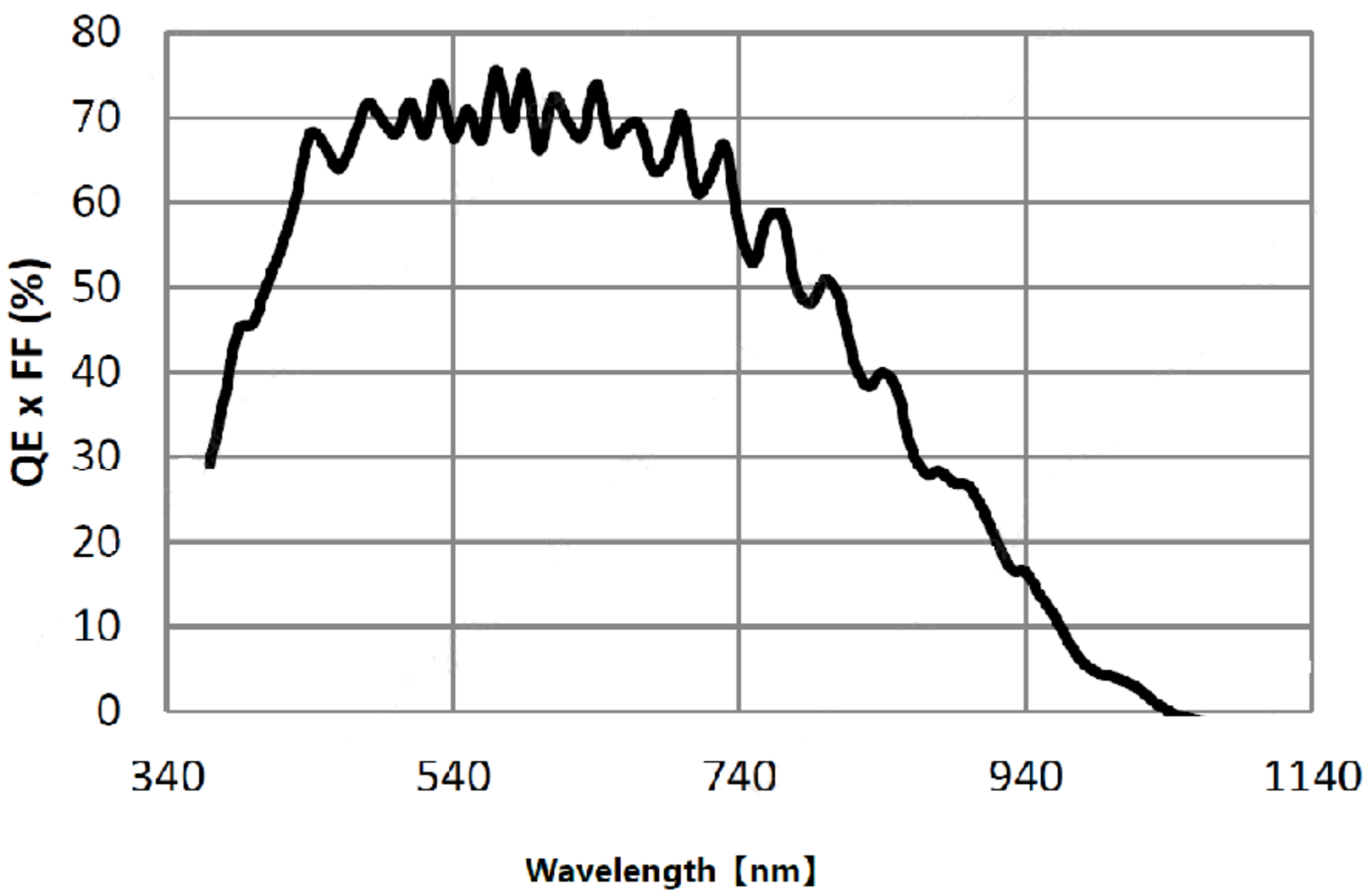
Spectrogram