5000 series

L5047CK140E

Features

- Support brightness enhancement, gamma correction, LUT and other ISP functions;
- Support PRNU correction in target bright field;
- Support various image formats of output data;
- Support DC12~24V wide-range power supply;
- Conform to CE, UL, RoHS certifications;

Dimensions (mm)

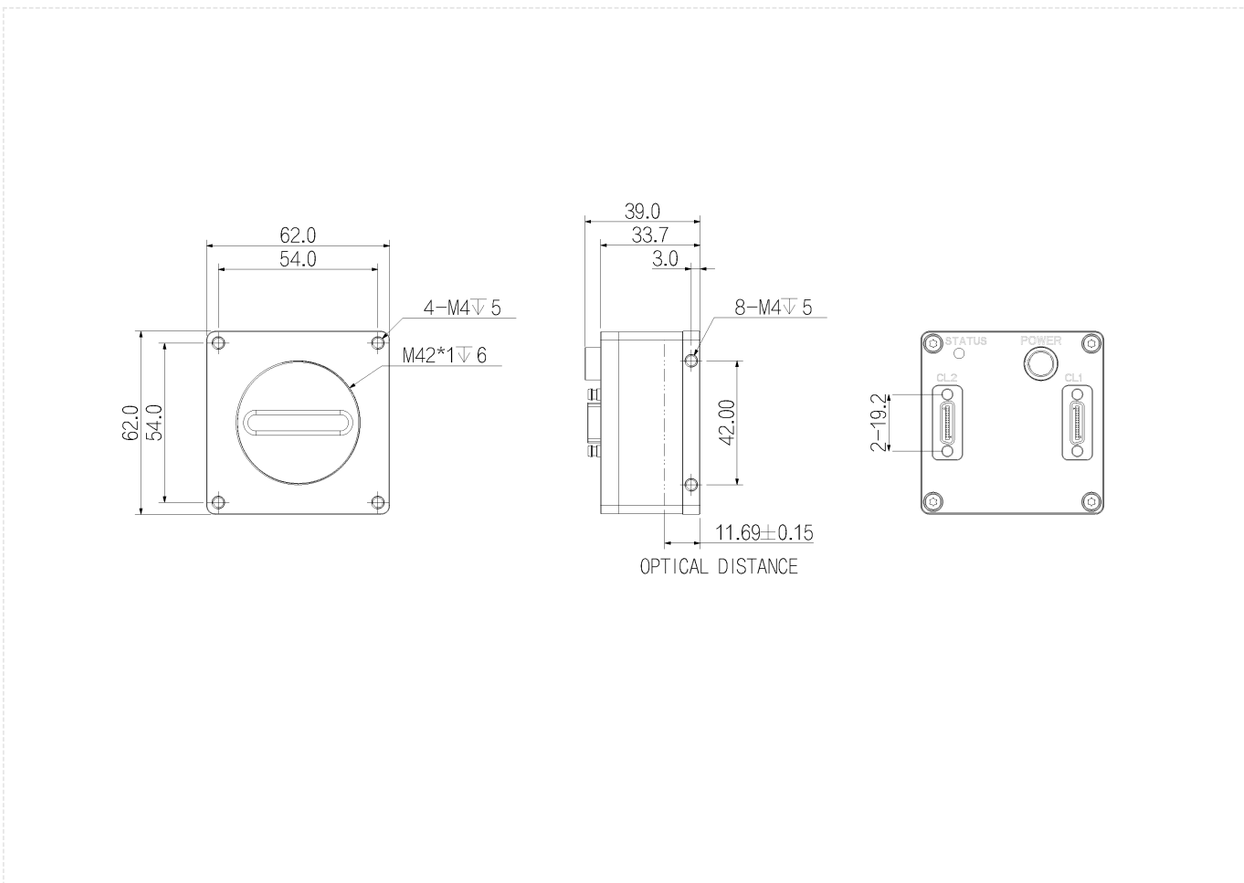

Specification

Model		L5047CK140E
Basic	Sensor	4K
	Image Sensor	CMOS
	Shutter	Global
	Resolution	4096 × 2
	Line Rate	62 kHz
	Bit Depth	12
	Mono/Color	Color
	Pixel Size	7 μm × 7 μm
Image	Pixel	4096×2
	S/N Ratio	39.4 dB
	Dynamic Range	66 dB
	Image Format	BayerRG8,RGB8
	Binning	Support
	ROI	Support
	X Flip	Support
	Gain	1–32
	White Balance	Support
	Gamma	From 0 to 4，support LUT
	Exposure Time	4 us–100 ms
	Trigger Mode	Software Trigger/Hardware Trigger/Free Run Mode
	FPN	Support
Performance	User Setting	Support two sets of user-defined configurations
	Pixel Clock	34/51/64/85 MHz
Port	Port	CameraLink
	Lens Mount	M42
Power	Power Supply	12V ~ 24 VDC power supply
	Power Consumption	4.5 W
Structure	Product Dimensions	62 mm × 62 mm × 33.7 mm (Not including rear case connector)
	Net Weight	200 g
Environment	Storage Temperature	-30℃~+80℃
	Operating Temperature	-30℃~+50℃

Connector Pin-out

Definitions of camera 6-pin ports:

Pin	Description	Features
1	Power	+12VDC to 24VDC power supply
2		not connected
3		
4		
5		
6	GND	Camera DC power ground

Definition of 6-pin power port

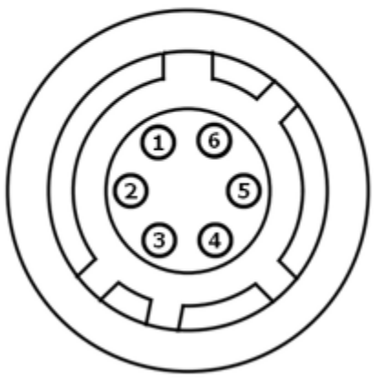
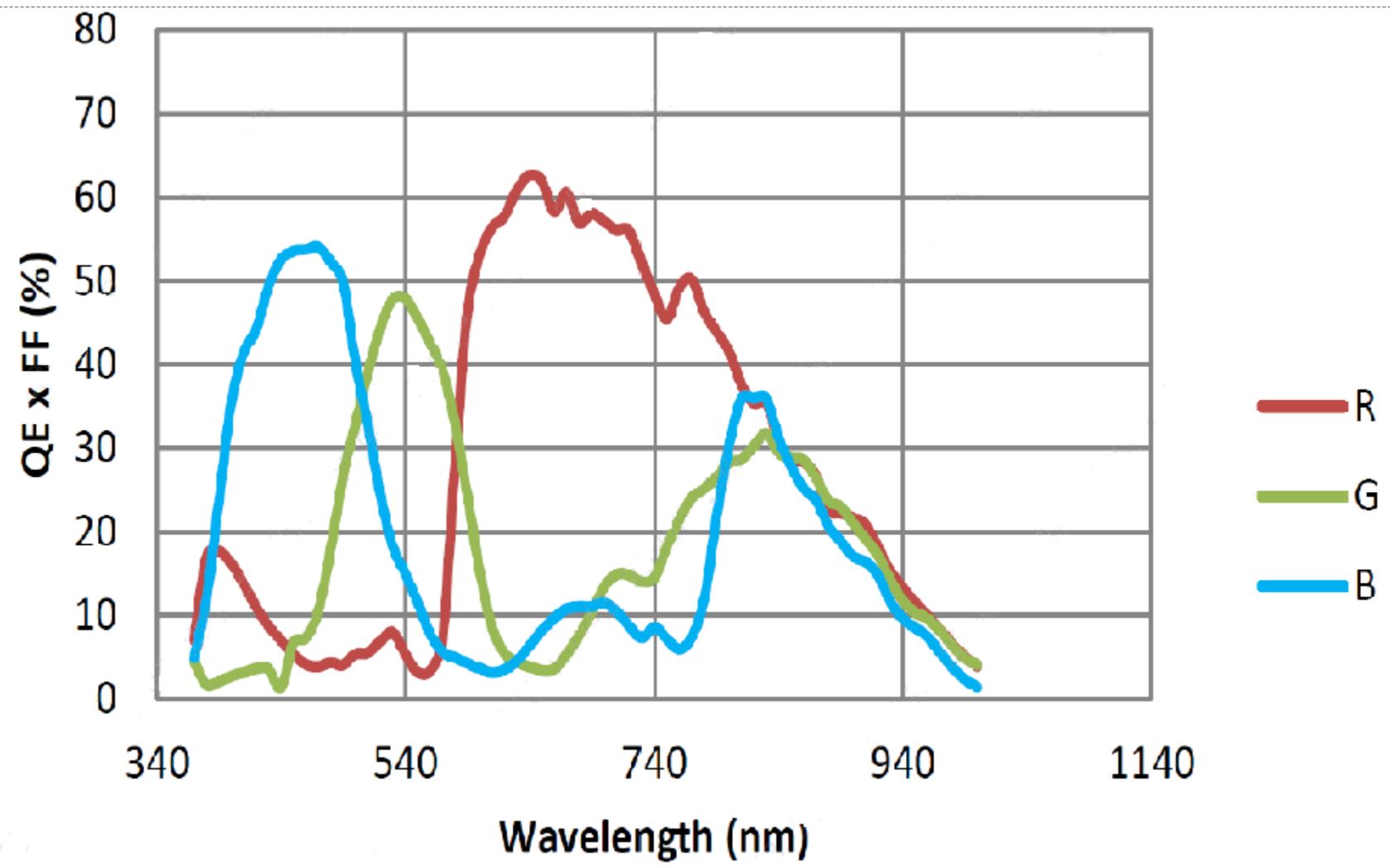
Spectrogram