5000 series

L5022MG141E

Features

- Support brightness enhancement, gamma correction, LUT and other ISP functions;
- Support PRNU correction in target bright field;
- Support various image formats of output data;
- Support DC12~24V wide-range power supply;
- Conform to CE, UL, RoHS certifications;

Dimensions (mm)

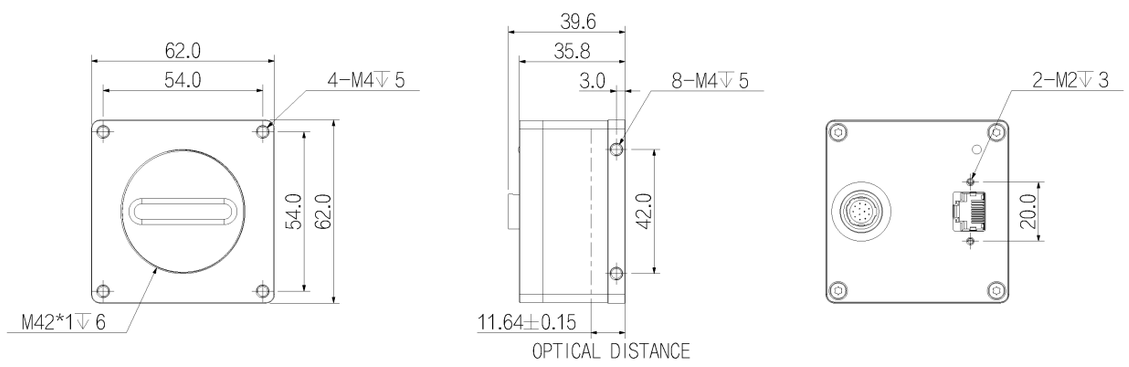

Specification

Model		L5022MG141E
Basic	Sensor	2K
	Image Sensor	CMOS
	Shutter	Global
	Resolution	2048 × 1
	Line Rate	49 kHz
	Bit Depth	12
	Mono/Color	Mono
	Pixel Size	14 μm × 14 μm
Image	S/N Ratio	>38dB
	Dynamic Range	66dB
	Image Format	Mono8/10/12/10Packed/12Packed
	ROI	Support
	X Flip	Support
	Gain	1~32
	Gamma	From 0 to 4，support LUT
	Exposure Time	8μS~100mS
	Trigger Mode	Software Trigger/Hardware Trigger/Free Run Mode
	FPN	Support
Performance	User Setting	Support two sets of user-defined configurations
	Image Buffer	64MB image cache，64MB data cache
Port	Port	GigE
	GPIO Interface	2 differential input, 2 single-end input, 1 differential output and 1 GPIO.
	Lens Mount	M42 x 1
Power	Power Supply	DC12~24V power supply via 12-pin Hirose connector
	Power Consumption	4.5W
Structure	Product Dimensions	62 mm × 62 mm × 35.8 mm (Not including rear case connector)
	Net Weight	240 g
Environment	Storage Temperature	-30℃~+80℃
	Operating Temperature	0℃~+50℃

Connector Pin-out

Port definitions of 12-pin signals:

Pin	Description	Features
1	Power GND	Power ground
2	Camera Power	Camera power supply (signal ground)
3	IN Line5+	Input Line5+
4	IN Line5-	Input Line5-
5	OPT GND	Opto-isolated ground point
6	OPT IN Line1	Optocoupler input 1
7	OPT IN Line2	Optocoupler input 2
8	GPIO Line4	Bidirectional GPIO Line4
9	OUT Line6+	Output Line6+
10	OUT Line6-	Output Line6-
11	IN Line3+	Input Line3+
12	IN Line3-	Input Line3-

Port definitions of 12-pin signals

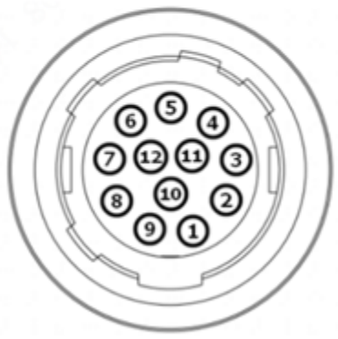

Spectrogram

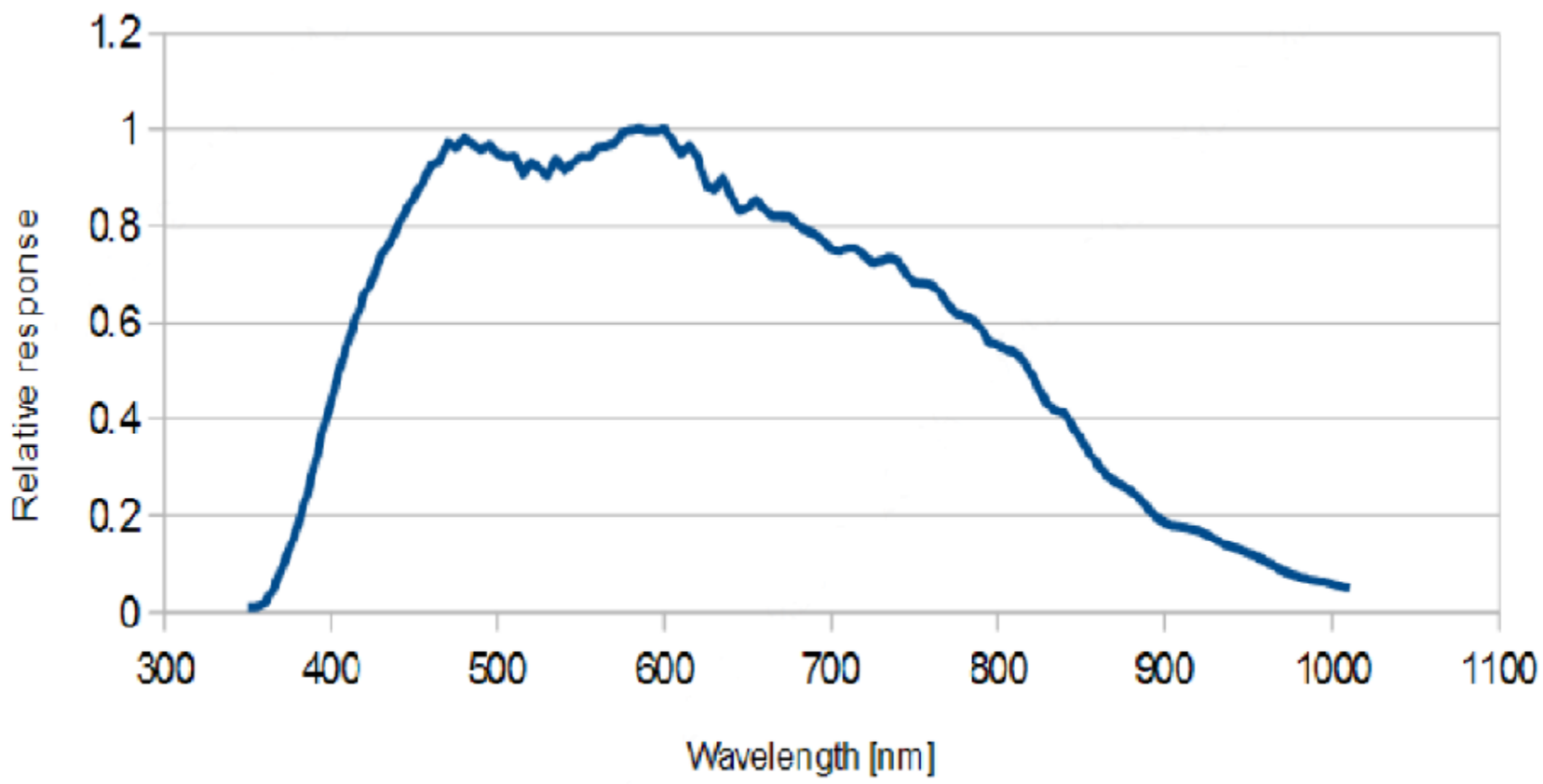

Wavelength【nm】