Shenzhen Inovance Technology Co., Ltd.

Address: Building E, Hongwei Industrial Park, Liuxian 2nd Road, Baocheng 70th Zone, Bao'an District, Shenzhen, P.R. China
Switchboard: (0755) 2979 9595
Fax: (0755) 2961 9897
http://www.inovance.com

Suzhou Inovance Technology Co., Ltd.

Address: No.16, Youxiang Road, Yuexi Town, Wuzhong District, Suzhou city, P.R. China
Switchboard: (0512) 6637 6666
Fax: (0512) 6285 6720
http://www.inovance.com

Customer support: 4000-300124

19120119A01

This document is subject to change without prior notice.
Copyright ©Shenzhen Inovance Technology Co., Ltd.

INOVANCE

Inoprec

SV660 Series Servo Drives

Empowers Factory Intelligent Upgrading

Inovance 4th Generation of General-Purpose Servo Drives

SV660 Series

consistently provide the most competitive servo drive products for industrial automation equipment

Friendly platform and product design provide full caring for customers' equipment development, manufacturing, application, and after-sales processes

- Design and development
- Manufacturing
- Application
- After-sales service

Table of Contents

Inovance Axis-Network Ecology ···· 03
Features of SV660 Series ····· 05
Naming Conventions ····· 13
Model Specifications and Dimensions ·· 14
Interface Description ····· 19
Cables and Options ····· 43

SV660 Series Flexibly Adapts to Various Control Demands

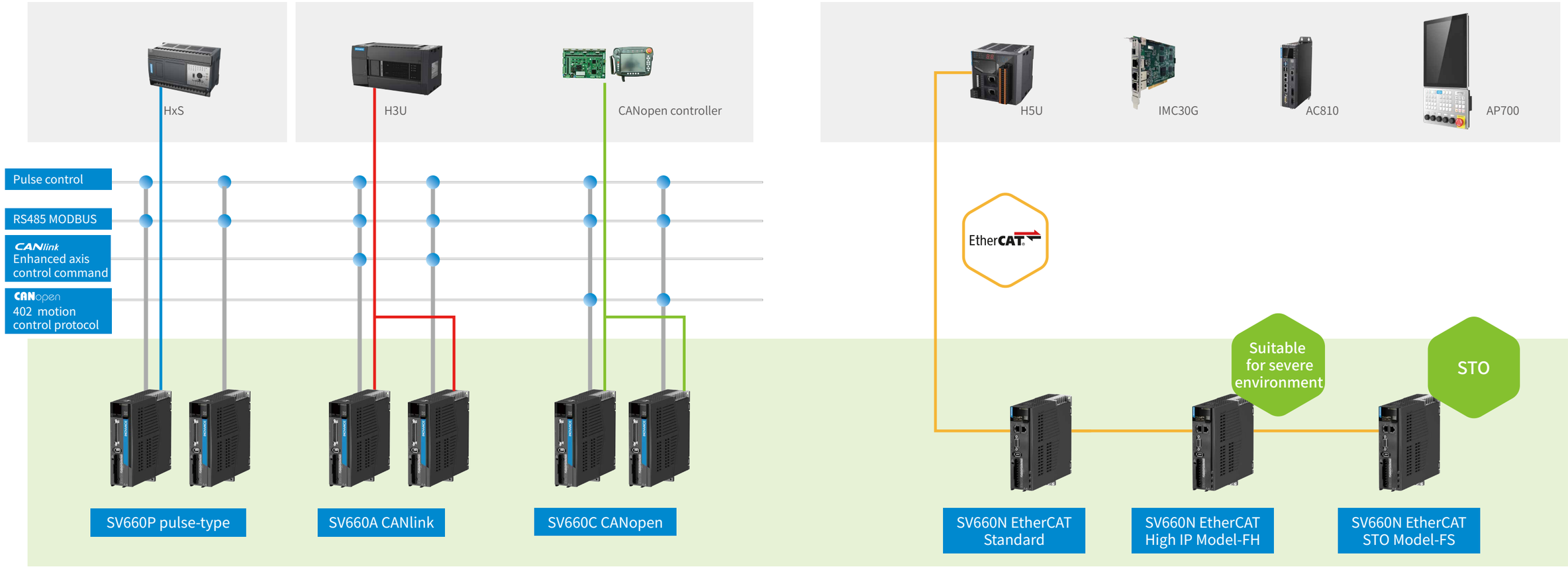

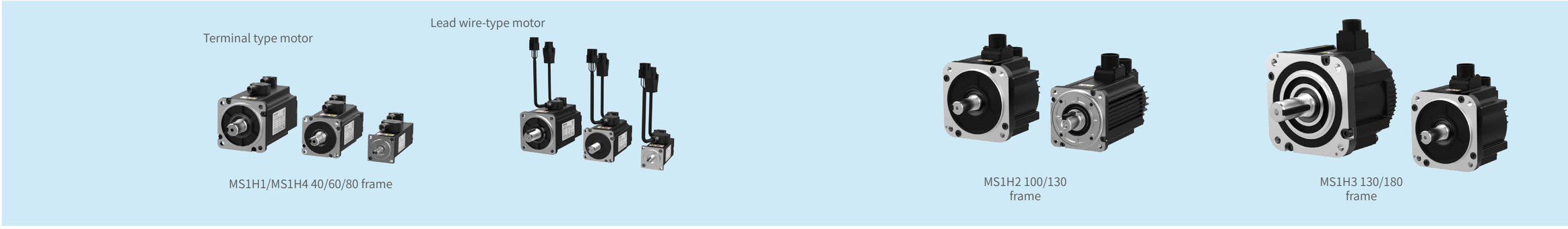

High response 3 kHz bandwidth

Control Performance

Compared with the previous IS620 series, the SV660 series has a much higher response bandwidth and faster command following, and effectively shortens the setting time for accurate positioning. The servo drive performance featuring ultra-high speed and ultra-precision control will give greater play to the mechanical equipment performance and empower the R&D personnel to tackle their research subjects.

	SV660	IS620
Frequency lower limit	12kHz	8kHz
Current loop sampling	625kHz	16kHz
Speed loop sampling	16kHz	8kHz
Position loop sampling	8kHz	4kHz

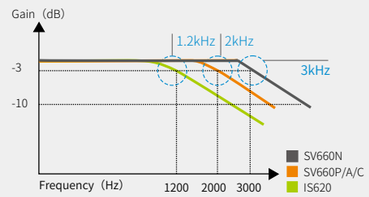

Note: Speed loop bandwidth - The frequency at which the servo drive can respond to the fastest speed command.

High accuracy 8388608P/R

Positioning Accuracy

The MS1 series servo drive motor uses a 23bit single-turn/ multi-turn absolute encoder, with the resolution increased by 8 times, which matches the absolute accuracy correction function of the built-in encoder of the SV660 series motor and significantly improves the repeatability and absolute positioning accuracy of the equipment.

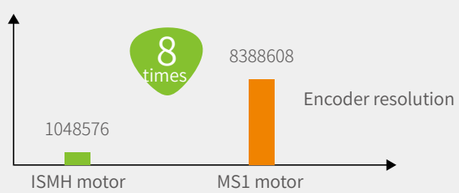

8,000,000 PPR to record absolute positions of up to 65,535 revolutions

Used in combination with the MS1 series servo drive motor with low torque fluctuation

Fulfilling the application demands for absolute position records and high stiffness

High-speed communication cycle of 125 μs

Synchronization Period

The whole SV660 series uses the main control chip with higher performance so that the communication and interaction capabilities are further improved. The 125 μs synchronization period is supported for all operation modes over EtherCAT. The trajectory control techniques for interpolation and cam are improved.

EtherCAT Operation mode	SV660N Min. synchronization period	IS620N Min. synchronization period
Profile Position Mode (PP)	125μs	1ms
Homing Mode (HM)	125μs	1ms
Cyclic Synchronous Position Mode (CSP)	125μs	1ms
Cyclic Synchronous Velocity Mode (CSV)	125μs	500μs
Profile Velocity Mode (PV)	125μs	500μs
Profile Torque Mode (PT)	125μs	125μs
Cyclic Synchronous Torque Mode (CST)	125μs	125μs

More elaborate trajectory control

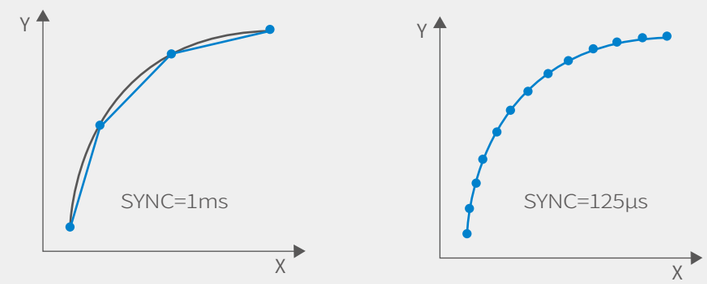

High synchronization with 20 ns jitter

Synchronization Jitter

Through the fine adjustment of the EtherCAT distributed clock, the SV660N series achieves a distance of 120 m for 300 nodes, a synchronization error of 15 ns, and a synchronization jitter of ± 20 ns. At the same time, the position loop control is synchronized with the synchronization signal so that the multi-axis control is further improved.

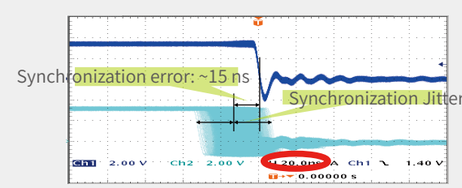

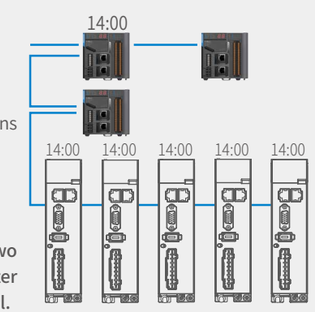

Note: Synchronization error refers to the time deviation of any two nodes to receive the synchronization signal. Synchronization jitter refers to the variation error of the synchronization signal interval.

Length
-22%

Size
-30%

Improved power density

With the new generation power components and innovative design scheme, the SV660 series servo drive is smaller in size. Better adapt to equipment miniaturization and compact design trend

		SV660	IS620
400W	Width mm	40	50
	Height mm	160	160
	Depth mm	150	173
	Volume L	0.96	1.38
	Compared to IS620	-30%	

Split encoder

The Inovance's proprietary split encoder significantly reduces the motor size, adapts to the confined installation space, reduces the motor weight, and is ideal for moving mechanisms.

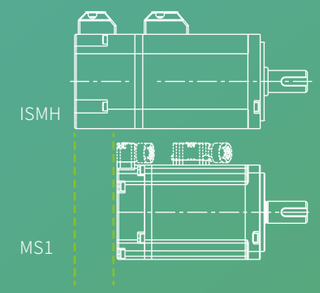

Motor Specifications	400W	
	Inovance ISMH	Inovance MS1
Mounting flange	60	60
Shaft diameter mm	14	14
Length mm	118	91
Length of model with brake	158	119
Weight kg	1.6	1.3
Weight of model with brake	2.0	1.8

Improved wiring efficiency

By using an absolute encoder, the SV660 series eliminates limit switches and home switches, which is convenient for wiring while reducing failure points.

Easy to install

The absolute encoder's battery is directly attached to the drive by snap-fit joint which is easy to remove and replace.

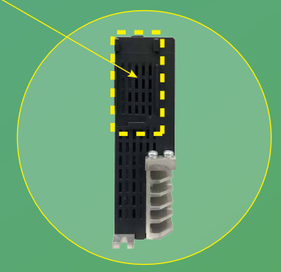

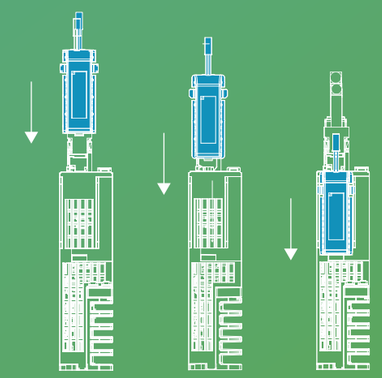

Stune for easy commissioning

Auto-tuning with One Parameter

The servo drive can be set by configuring a single parameter. The load inertia ratio is self-adapted and identified, and the resonance suppression parameters are automatically set, which greatly reduces the tuning difficulty and improves the efficiency.

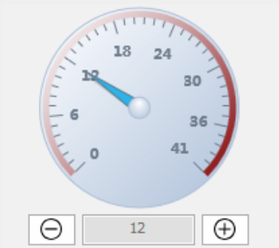

Application Mode	Description
H09-00=3 Interpolation mode + automatic inertia identification	The gain is maintained when the set stiffness is maintained regardless of inertia change to ensure the interpolation synchronization effect
H09-00=4 Normal mode + automatic inertia identification	The gain changes when the stiffness is maintained, and the actual gain at the same stiffness level decreases when the inertia is greater than 1
H09-00=6 Quick positioning + automatic inertia identification	The model tracking function is added in normal mode to realize high-speed positioning

Etune for easy commissioning

Automatic Identification of Optimal Parameters

For equipment with a relatively fixed load, the background works in wizard mode to provide the positioning requirement and motion curve, and the servo drive automatically runs and tunes servo drive parameters to realize the desired positioning effect.

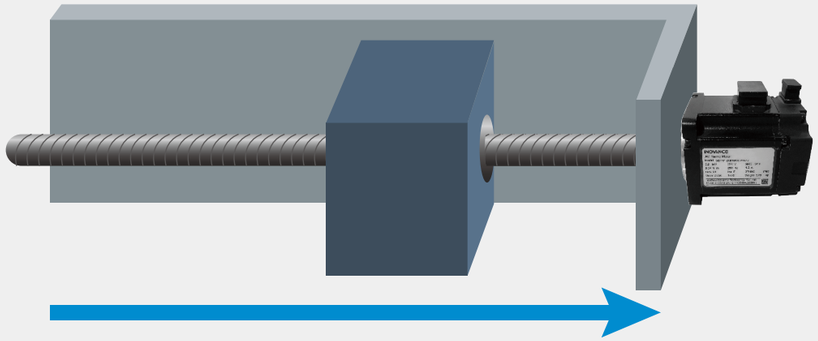

Before one-key tuning

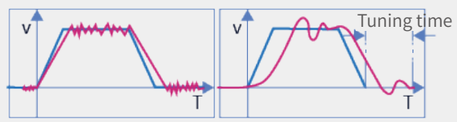

After one-key tuning

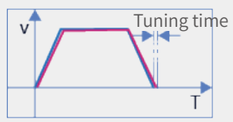

① Poor mechanical behavior ② Gain and inertia mismatch ③ Perfect positioning

Guided commissioning software

Graphic, Configurable, and Easy to use

The newly designed background software further simplifies the use of the servo drive by providing wizard guides and a graphical interface for parameter configurations. Even green hands can easily set servo drive parameters.

Model Adaption

Wizard Mode

I/O Monitoring and Control

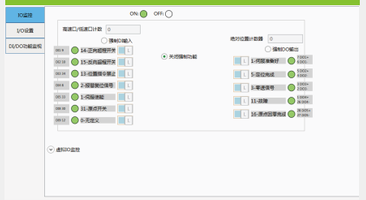

Restore Settings

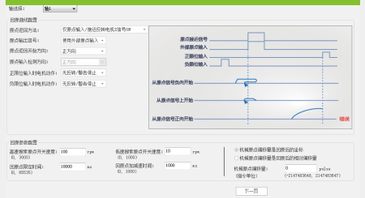

Replicated parameters downloaded at a time

Significantly Reduces the Time to Download Device Replicated Parameters

For servo drive parameter replication over the EtherCAT bus, parameters for all SV660N servo drives in one device can be uploaded and downloaded at a time with the commissioning software over EtherCAT.

Security

Effectively Protect Personal and Equipment Safety

Functional safety

IIEC61508-1 SIL-3 standard

Safe Torque Off (STO) function: no output-side contactor is required to prevent electric shock or mechanical damage in fault state.

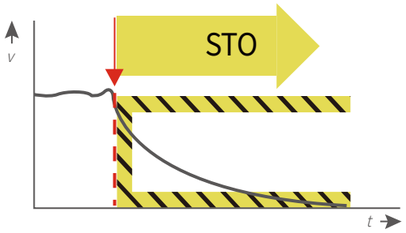

Dynamic braking

Dynamic braking can be activated in case of servo drive failure, emergency stop or shutdown, and motor brake failure to prevent equipment loss or personal injury caused by rapid motor rotation.

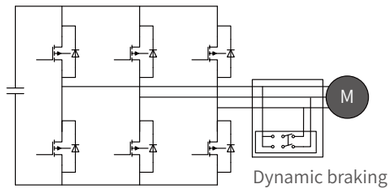

Protection

Improved Equipment Reliability in a Highly Polluted Environment

Independent air filter

A new plastic air filter is added, and for heating devices such as capacitors, the maze-type design ensures the independence of the air filter. Avoid the ingress of dust and foreign matter into the control circuit.

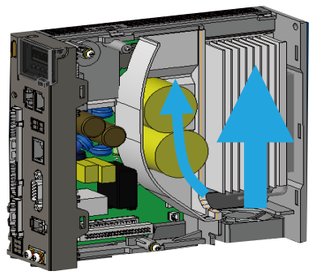

IP67 motor

For the H1/H4 motor in the MS1 series, the use of a lock-type terminal ensures that the motor conforms to IP67 protection rating and can be reliably applied in places where water vapor, oil pollution, and vibration exist.

Certifications

Complete Certifications, Suitable for International Markets

Failure tracing

Black box for Recording Fault Information

A failure occurs

The fault information is sent to and stored in the servo drive when a fault occurs.

Restore the production

A user eliminates the failure and restores the normal production.

Analyze the failure

1.A technician arrives at the field to deal with the failure

2.Send the black box data to the technician

High-speed comparison rate

High-speed Position Comparison Rate

The motor runs to the set position and outputs the DO digital signal (response time: 5 μs), thereby realizing high-speed processing logic. Applicable to high-speed comparison interrupt output and die cutting.

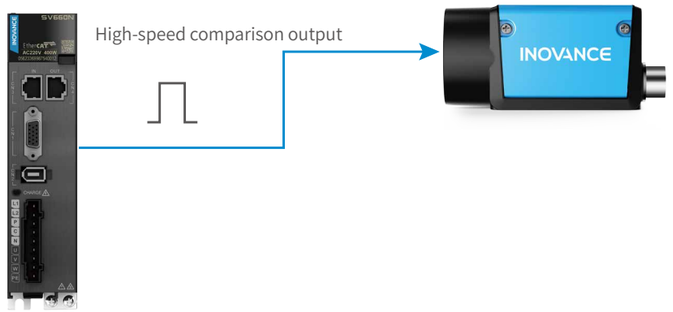

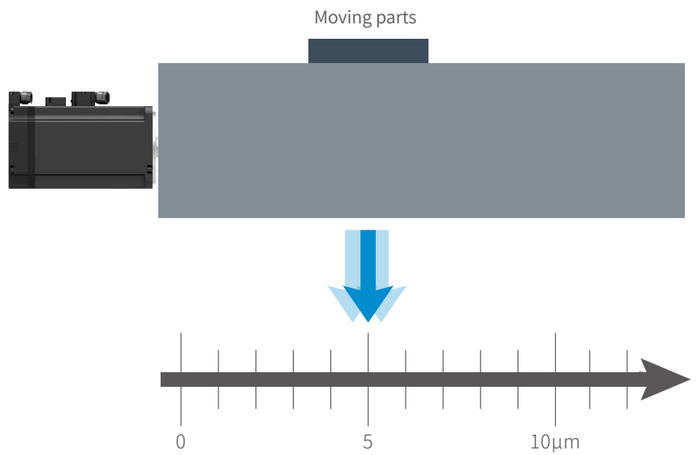

Naming Conventions for Servo Drive and Motor

Naming conventions for servo drive

SV660 P S 5R5 I - **
① ② ③ ④ ⑤ ⑥

① Serial number servo drive	③ Voltage class S：220V T：380V	⑤ Installation method I：Substrate installation
② Product category P: Pulse type A: CANlink bus type C: CANopen bus type N: EtherCAT bus type	④ Rated output current 1R6：1.6A · · · 021：21A 026：26A	⑥ Customized specifications Vacancy: Standard model -FH: Model with high IP -FS: STO functional safety

Note: -FS is only supported by the SV660N series

Naming Rules of Motors

MS1 H 1 - 40B 30C B - A3 3 1 Z - *
① ② ③ ④ ⑤ ⑥ ⑦ ⑧ ⑨ ⑩

① Product family MS1 series servo drive motor	⑤ Rated Speed （rpm） B：×10 C：×100 For example: 30C：3000rpm	⑨ Brake, oil sealing 0：None 1：Oil sealing 2：Brake 4：Oil sealing + brake
② Product series H：Motor with the maximum speed higher than the rated speed V：Motor with the maximum speed equal to the rated speed	⑥ Voltage class（V） B：220 D：380	⑩ Sub-serial number (outgoing line form and cooling mode) Z: Z series (terminal type, natural cooling) -S: Lead wire type, natural cooling
③ Inertia class 1: low inertia, small capacity 2: low inertia, medium capacity 3: medium inertia, medium capacity 4: medium inertia, small capacity	⑦ Encoder type A3： 23bit multi-turn absolute encoder	
④ Rated power（W） B：×10 C：×100 For example：40B：400W	⑧ Shaft connection method 3：Solid, keyed, and threaded hole	

Note: -S models are only supported by MS1H1 and MS1H4

SV660N Specifications

Servo drive（AC200V）	SIZE A		SIZE B	SIZE C	SIZE D
	SV660 □ S1R6I	SV660 □ S2R8I	SV660 □ S5R5I	SV660 □ S7R6I	SV660 □ S012I
	Single-phase 220V		Single-phase 220V	Single-phase/three-phase 220V	Single-phase/three-phase 220V
	50W、100W、200W	400W	550W、750W	850W、1.0kW	1.3kW、1.5kW
	MS1H1-05B30CB MS1H1-10B30CB MS1H1-20B30CB	MS1H1-40B30CB MS1H4-40B30CB	MS1H1-55B30CB (model without brake) MS1H1-75B30CB MS1H4-75B30CB	MS1H1-10C30CB (model without brake) MS1H2-10C30CB MS1H3-85B15CB	MS1H3-13C15CB MS1H2-15C30CB

Servo drive（AC400V）	SIZE C		SIZE D		SIZE E		
	SV660 □ T3R5I	SV660 □ T5R4I	SV660 □ T8R4I	SV660 □ T012I	SV660 □ T017I	SV660 □ T021I	SV660 □ T026I
	Three-phase 380V	Three-phase 380V	Three-phase 380V				
	850W	1.0kW、1.3kW、1.5kW	1.8kW、2.0kW、2.5kW	2.9kW、3.0kW	4.0kW、4.4kW、5.0kW	5.5kW	7.5kW
	MS1H3-85B15CD	MS1H3-13C15CD MS1H2-10C30CD MS1H2-15C30CD	MS1H3-18C15CD MS1H2-20C30CD MS1H2-25C30CD	MS1H3-29C15CD MS1H2-30C30CD	MS1H3-44C15CD MS1H2-40C30CD MS1H2-50C30CD	MS1H3-55C15CD	MS1H3-75C15CD

SV660N Specifications

Electrical Specifications for Servo Drive

Single-phase/three-phase 220 V servo drive

Physical Dimensions	SIZE-A		SIZE-B	SIZE-C	SIZE-D
SV660N drive	S1R6	S2R8	S5R5	S7R6	S012
Continuous output current Arms	1.6	2.8	5.5	7.6	11.6
Maximum output current Arms	5.8	10.1	16.9	23.0	32.0
Power supply of main circuit	Single-phase AC200V — 240V,-10 — +10%,50/60Hz			Single-phase/three-phase AC200V — 240V,-10 — +10%,50/60Hz	
Power supply of control circuit	Bus-powered, shared power input and rectifier			Single-phase AC220V — 240V,-10 — +10%,50/60Hz	
Brake release function	External braking resistor		Built-in regenerative resistor		

Three-phase 380 V Servo Drive

Physical Dimensions	SIZE-C		SIZE-C		SIZE-E		
SV660N drive	T3R5	T5R4	T8R4	T012	T017	T021	T026
Continuous output current Arms	3.5	5.4	8.4	12	17	21	26
Max. output current Arms	11	14	20	29.75	41.25	52.12	64.25
Power supply of main circuit	Three-phase AC380V — 440V，-10 — +10%，50/60Hz						
Power supply of control circuit	Single-phase AC380V — 440V，-10 — +10%，50/60Hz						
Brake release function	Built-in regenerative resistor						

Note: The main power supply of S7R6 and S012 drives can be connected to either single-phase or three-phase power supply, depending on the power supply available on site. When single-phase input is used for models S7R6 and S012, derating is not required.

General Specifications for Servo Drive

Item			Description
Basic specifications	Control mode		IGBT PWM control, sine wave current drive mode 220 V, 380 V: single/three-phase full-bridge rectification.
	Encoder feedback		23-bit multi-turn absolute encoder (the variant without battery can be used as an incremental encoder)
	Use conditions	Use/Storage temperature (Note 1)	0° C to +55° C (10% derating for every 5° C increase when the ambient temperature is above 45° C) / -20° C to +70° C
		Use/storage humidity	Below 90% RH (no condensation)
		Vibration/Impact resistance	$4.9m/s^2/19.6m/s^2$
		Ingress Protection	IP20 Note: Except terminals (IP00)
		Pollution Degree	PD2
		Altitude	Maximum altitude: 5000 m For altitudes lower than or equal to 1000 m, derating is not required.For altitudes above 1000 m but lower than 2000 m, derate 1% for every additional 100 m.For altitudes above 2000 m, contact Inovance.
Speed/Torque control mode	Performance	Speed range	1:6000 (The lower limit of the speed control range is the condition that the system does not shut down when running at the rated torque load)
		Speed loop bandwidth	3 kHz
		Torque control accuracy (repeatability)	±2%
		Soft startup time setting	0 to 65 s (acceleration and deceleration can be set)
	Input signal	Speed command input	Network-type commands are derived from EtherCAT communication setting. Supports local mode and local multi-speed.
		Torque command input	

Item			Description
Position control mode	Performance	Positioning time	1 ms to 10 ms
	Input signal	Position reference	Network-type commands are derived from EtherCAT communication setting. Supports local mode.
	Digital input signal	Allowing signal allocation change	Five DIs
			P-OT (positive limit switch) N-OT (negative limit switch) HomeSwitch (Home switch) TouchProbe1 (Probe 1) TouchProbe2 (Probe 2)
	Digital output signal	Allowing signal allocation change	Three DOs, DO load capacity: 50 mA, voltage range: 5 V to 30 V.
			S-RDY (Servo drive ready) TGON (Motor rotation output) Comparison output, brake output, and EDM output.
Built-in functions	Overtravel (OT) prevention		The servo drive stops immediately at P-OT or N-OT actions.
	Protections		Overcurrent, overvoltage, undervoltage, overload, main circuit detection abnormal, heatsink overheat, overspeed, encoder abnormal, CPU abnormal, and parameter abnormal.
	LED monitor		Main power CHARGE indicator, 5-digit LED monitor.
	Vibration suppression		Five notches, 50 Hz to 5000 Hz, two of which are self-adaptive.
	Communication function	Connection protocol	RS232
		Communication protocol	EtherCAT
		Multi-drop communication	Max. number of slave stations: 255.
		Shaft address setting	No physical knob, set by using the software: 0 to 255.
		Function	Status display, user parameter setting, monitor display, alarm tracing display, JOG running and auto-tuning operation, speed, and torque command signal observation.
	Other		Gain adjustment, alarm record, and JOG running.

Technical Specifications for EtherCAT Communication

Item		Specifications
EtherCAT Basic performance of slave station	Communication protocol	EtherCAT protocol
	Service supported	CoE (PDO and SDO)
	Synchronization mode	DC - distributed clock
	Physical layer	100BASE-TX
	Baud rate	100 Mbit/s (100Base-TX)
	Duplex mode	Full duplex
	Topological structure	Ring topology and linear topology
	Transmission medium	Cat5e LAN cable or better.
	Transmission distance	Less than 100 m between two nodes (good environment, good quality of cables).
	Number of slaves	65535 slaves are supported as defined in the protocol, but no more than 100 slaves are supported in actual use.
	EtherCAT frame length	44 to 1498 bytes
	Process data	Single Ethernet frame up to 1486 bytes.
	Synchronization jitter of two slaves	< 1 μs
	Refresh time	About 30 μs for 1000 on-off inputs & outputs; about 100 μs for 100 servo drive shafts. The refresh time varies with the interface.
	Bit error rate	10-10 Ethernet standard
EtherCAT configuration unit	FMMU unit	8 units
	Storage synchronization management unit	8 units
	Progress data RAM	8 kB
	Distributed clock (DC)	64 bits
	EEPROM capacity	32 kbit Initialization data is written by EtherCAT master station

Note 1: Install the servo drive within the ambient temperature range. When it is installed in the electric cabinet, the temperature inside the cabinet must be within this range.

SV660P/SV660A/SV660C Specifications

Electrical Specifications for Servo Drive

Single-phase/three-phase 220 V servo drive

Physical Dimensions	SIZE-A		SIZE-B	SIZE-C	SIZE-D
Drive model SV660P/A/C	S1R6	S2R8	S5R5	S7R6	S012
Continuous output current Arms	1.6	2.8	5.5	7.6	11.6
Maximum output current Arms	5.8	10.1	16.9	23.0	32.0
Power supply of main circuit	Single-phase AC200V — 240V,-10 — +10%,50/60Hz			Single-phase/three-phase AC200V — 240V,-10 ～ +10%,50/60Hz	
Power supply of control circuit	Bus-powered, shared power input and rectifier			Single-phase AC220V — 240V,-10 — +10%,50/60Hz	
Brake release function	External braking resistor		Built-in regenerative resistor		

Three-phase 380 V Servo Drive

Physical Dimensions	SIZE-C		SIZE-C		SIZE-E		
Drive model SV660P/A/C	T3R5	T5R4	T8R4	T012	T017	T021	T026
Continuous output current Arms	3.5	5.4	8.4	12	17	21	26
Max. output current Arms	11	14	20	29.75	41.25	52.12	64.25
Power supply of main circuit	Three-phase AC380V — 440V，-10 — +10%，50/60Hz						
Power supply of control circuit	Single-phase AC380V — 440V，-10 — +10%，50/60Hz						
Brake release function	Built-in regenerative resistor						

Note: The main power supply of S7R6 and S012 drives can be connected to either single-phase or three-phase power supply, depending on the power supply available on site. When single-phase input is used for models S7R6 and S012, derating is not required.

General Specifications for Servo Drive

Item				Description
Basic specifications	Control mode			IGBT PWM control, sine wave current drive mode 220 V: single-phase or three-phase full-wave rectification
	Encoder feedback			23-bit multi-turn absolute encoder (the variant without battery can be used as an incremental encoder)
	Use conditions	Use/Storage temperature (Note 1)		0 - +55 ° C (The average load factor must not be higher than 80% when the temperature is from 45° C to 55° C) (no freezing)/-40 - +70 ° C
		Use/storage humidity		Below 90% RH (no condensation)
		Vibration/Impact resistance		4.9 m/s2/19.6 m/s
		Ingress Protection		IP20
		Pollution Degree		PD2
		Altitude		Normal use when the altitude is below 1000 m and derated use when the altitude is from 1000 m to 2000 m
位置控制模式	Performance	Feedforward compensation		0–100.0% (resolution: 0.1%)
		Width of positioning completed		1–65535 encoder units (set the encoder unit of resolution 1)
	Input signal	Pulse command	Pulse input form	Three command forms including "direction + pulse", "Phase A and Phase B quadrature pulse", and "CW/CCW pulse"
			Input form	Differential input; open collector
			Pulse input reference	Differential input: maximum speed 4 Mpps, pulse width not lower than 0.125 μs Open collector: maximum speed 200 Kpps, pulse width not lower than 2.5 μs
		Power supply for built-in open collector (Note 2)		+24 V (built-in 2.4 kΩ resistor)
		Multi-position command selection		Use the DI signal combination to select position sections 0-15. (You can set other terminals to this function)
	Position output	Output form		Phase A, Phase B: differential output; Phase Z: differential output or open collector output
		Frequency division ratio		Any frequency division

Item				Description
Speed/Torque control mode	Performance	Speed change rate(Note 3)	Load change rate	Below 0.5% at 0–100% load (under rated speed)
			Voltage change rate	Rated voltage ±10%: 0.5% (under rated speed)
			Temperature change ratio	25±25° C: below 0.5% (under rated speed)
		Speed range		1:5000 (The lower limit of the speed range is the condition that the system does not shut down when running at the rated torque load)
		Frequency characteristics		2 kHz
		Torque control accuracy		±2%
		Soft startup time setting		0–60 s (acceleration and deceleration can be set)
输入输出信号	Digital input signal	Allowing signal allocation change		Seven DIs Max. frequency for DI1-DI5 digital signal inputs: 1 kHz (derated when the current limiting resistor is higher than 2.4 kΩ) Hardware delay less than 1 ms for DI8-DI9 digital signal inputs (2.4 kΩ) Functions of DI are described as below: Servo drive enabling, fault resetting, gain switchover, command switchover, zero-position fixation enabling, pulse disabling, positive limit, negative limit, positive (Note 4) torque limit, negative torque limit, positive jogging, negative jogging, step enabling, home switch, home enabling, and interrupt positioning.
	Digital output signal	Allowing signal allocation change		Five DOs, DO load capacity: 50 mA, voltage range: 5 V to 30 V. Functions of DO are described as below: Servo drive ready, motor rotating, zero speed signal, speed reached, position reached, positioning near signal, torque limiting, speed limiting, brake output, alarm, servo drive fault, and alarm code (3-digit output)
内置功能	Overtravel (OT) prevention			The servo drive stops immediately at P-OT or N-OT actions.
	Electronic gear ratio			0.262144 ≤ B/A ≤ 104857.6
	Protections			Overcurrent, overvoltage, undervoltage, overload, main circuit detection abnormal,heatsink overheat, phase loss, overspeed, encoder abnormal, CPU abnormal, and parameter abnormal.
	LED monitor			Main power CHARGE indicator, 5-digit LED monitor
	Vibration suppression			Four notches, 50 Hz to 4000 Hz, two of which are self-adaptive.
	Ease of use			One key parameter tuning, self-adaptive parameter tuning, speed observer, and model tracking
	Communication function	Connection device		RS232, RS485; CAN
		Communication protocol		Modbus and CANlink (including the axis control function)
		1:N communication		Maximum N = 32 for RS485
		Shaft address setting		Set based on user parameters
		Function		Status display, user parameter setting, monitor display, alarm tracing display, JOG running and auto-tuning operation, speed, and torque command signal observation
	Other			Gain adjustment, alarm record, JOG running, and dynamic braking

⚠ 注意

Note 1: Install the servo drive within the ambient temperature range. When it is installed in the electric cabinet, the temperature inside the cabinet must be within this range.

Note 2: The internal open collector power supply is not electrically insulated from the control circuit in the servo drive.

Note 3: The speed change rate is defined as follows:

$$\text{Speed change rate} = \frac{\text{idling speed - full-load speed}}{\text{Rated Speed}} \times 100\%$$

Actually, the amplifier deviation is caused by voltage change and temperature change, resulting in change to the calculated resistance. Such changes is reflected by the speed change. The speed change rate is expressed by a percentage to the rated speed, and includes the values at voltage change and temperature change.

Note 4: Positive rotation means that the motor rotates clockwise when viewed from the negative load side. (When viewed from the load side and shaft side, the motor rotates anti-clockwise.)

SV660N Wiring and Port Definition

Connection between SV660N servo drive and peripheral equipment(SIZE-A/B)

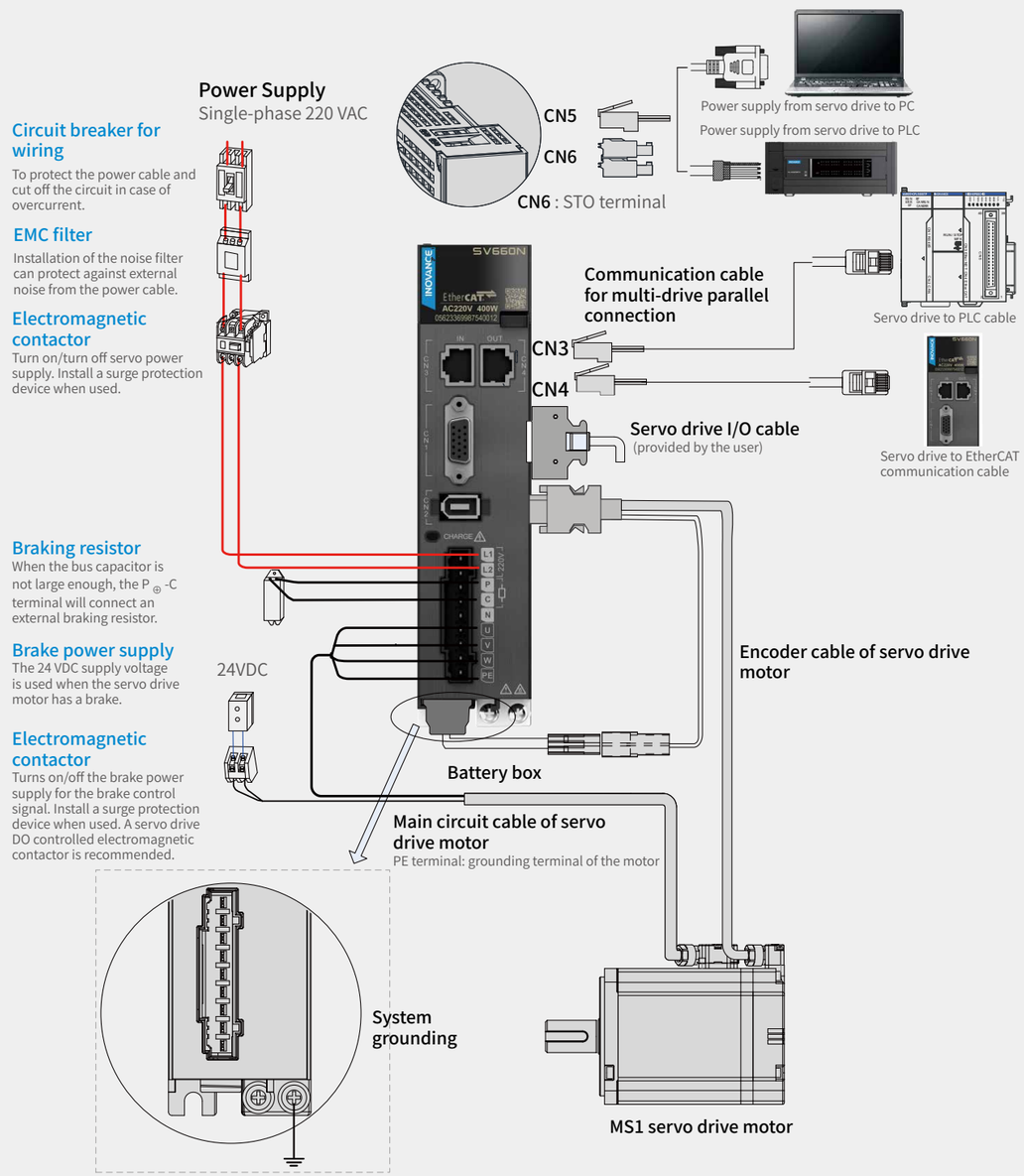

SV660N Wiring and Port Definition

Connection between SV660N servo drive and peripheral equipment(SIZE-C/D)

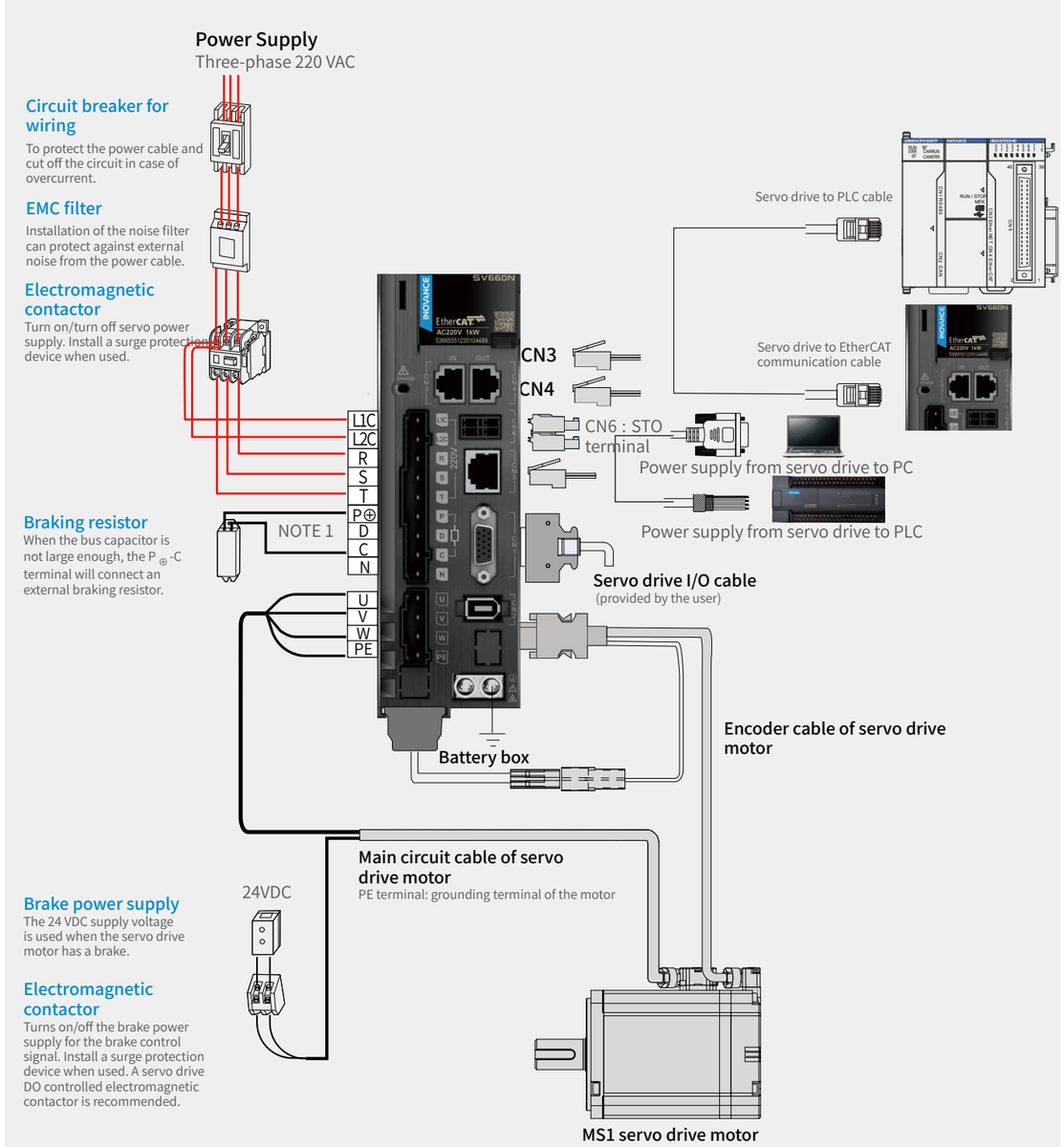

Note 1: Remove the jumper between terminals P ⊕ and D of the servo drive before connecting a brake resistor.
Note 2: This figure illustrates the three-phase 220 V drive.

SV660N Wiring and Port Definition

Connection between SV660N servo drive and peripheral equipment(SIZE-E)

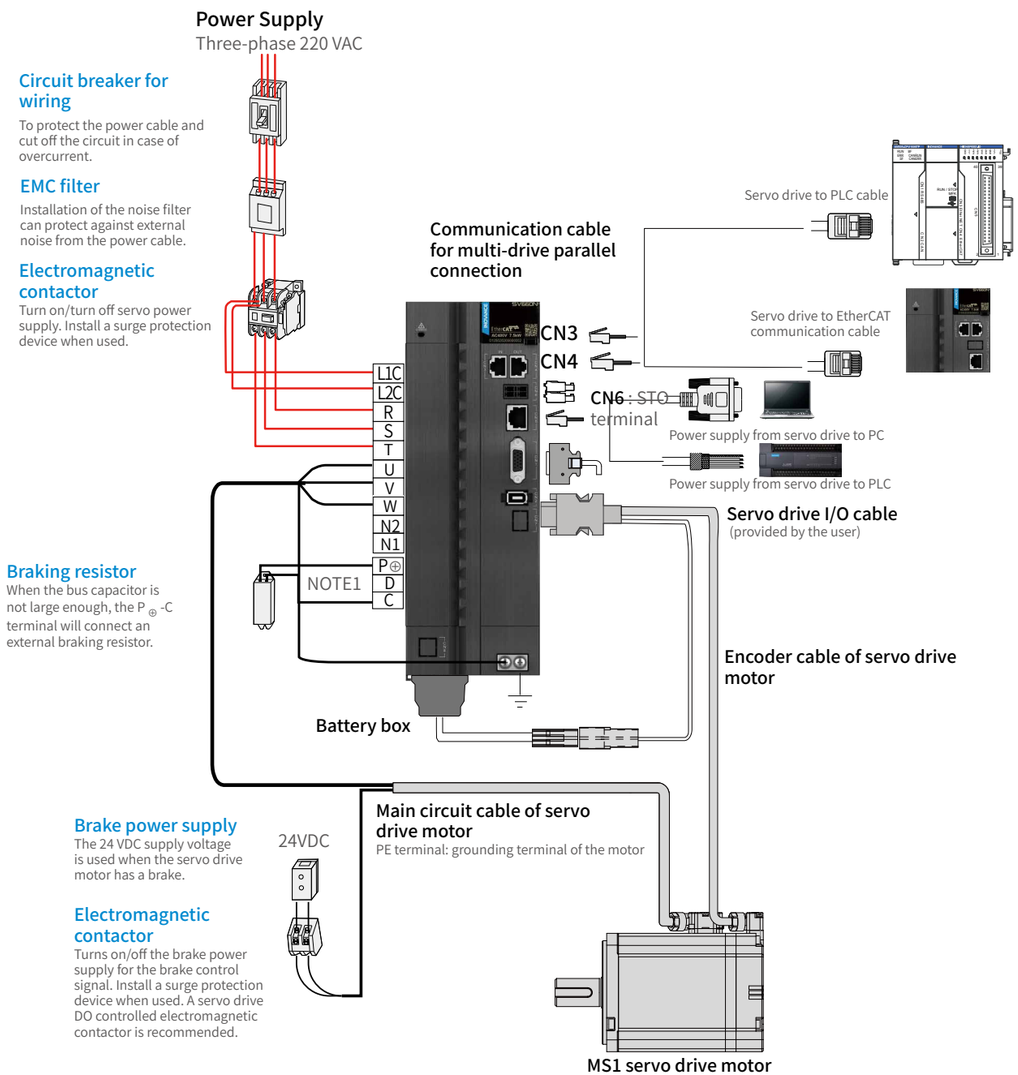

Note 1: Remove the jumper between terminals P⊕ and D of the servo drive before connecting a brake resistor.
Note 2: This figure illustrates the three-phase 380 V drive.
Note 3: An external DC reactor is connected between N1 and N2 (N1 is shorted circuited to N2 by default).

SV660N Servo Drive Port Definition

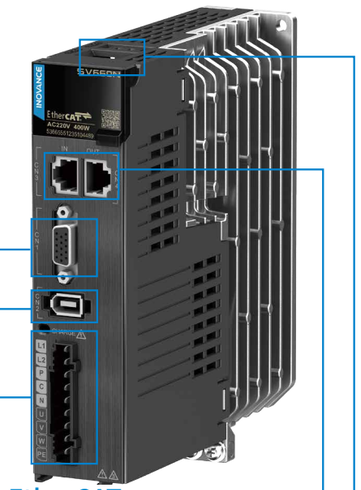

Definition of CN1 control terminal

Signal Name		Default Function	Pin No.	Terminal Function
General	DI1	P-OT	10	Positive limit switch
	DI2	N-OT	9	Negative limit switch
	DI3	HomeSwitch	8	Home switch
	DI4	TouchProbe2	7	Probe 2
	DI5	TouchProbe1	11	Probe 1
	+24V		15	Internal 24 V power supply, voltage range +20-28V, max. output current 200 mA
	COM-		14	
	COM+		13	Power supply input (12 to 24 V)
	DO1+	S-RDY+	1	Servo drive ready
	DO1-	S-RDY-	6	
	DO2+	ALM+	3	Fault output
	DO2-	ALM-	2	
	DO3+	BK+	5	Brake
	DO3-	BK-	4	

Definition of CN2 encoder terminal

Pin No.	Signal Name	
	23bit bus type	23bit absolute value
1	+5V	+5V
2	0V	0V
3	-	-
4	-	-
5	PS+	PS+
6	PS-	PS-
Housing	PE	PE

Main circuit port definition(SIZE A/B)

Terminal Symbol	Name
L1、L2（L1、L2、L3）	Main circuit power input terminals
P⊕、N⊖	Bus terminals of servo drive
P⊕、C（P⊕、D、C）	Terminals for connecting external regenerative resistor
U、V、W	Servo motor connection terminals
PE	Grounding terminal

Note: The numerical value in parentheses is the main circuit definition of SIZE-B.

Main circuit terminal definition（SIZE C/D/E）

Terminal Symbol	Name
L1C、L2C	Control circuit power input terminals
R、S、T	Main circuit power input terminals
P⊕、N⊖	Bus terminals of servo drive (SIZE-C/SIZE-D)
P⊕、D、C	Terminals for connecting external regenerative resistor
U、V、W	Servo motor connection terminals
PE	Grounding terminal (SIZE-C/SIZE-D)
N2、N1	Reactor connecting terminals (SIZE-E)

CN3、CN4 EtherCAT communication terminals

A		B	
Pin No.	Signal Name	Pin No.	Signal Name
1	TD+	1	TD+
2	TD-	2	TD-
3	RD+	3	RD+
4	-	4	-
5	-	5	-
6	RD-	6	RD-
7	-	7	-
8	-	8	-

CN5 RS232 communication terminals

Pin No.	Signal Name
6	RS232-TXD
7	RS232-RXD
8	GND
Housing	PE (shielded layer)

CN6 STO terminal

Pin No.	Signal Name
1	COM
2	24V
3	STO1
4	STO2

Wiring Diagram of SV660N in Control Mode

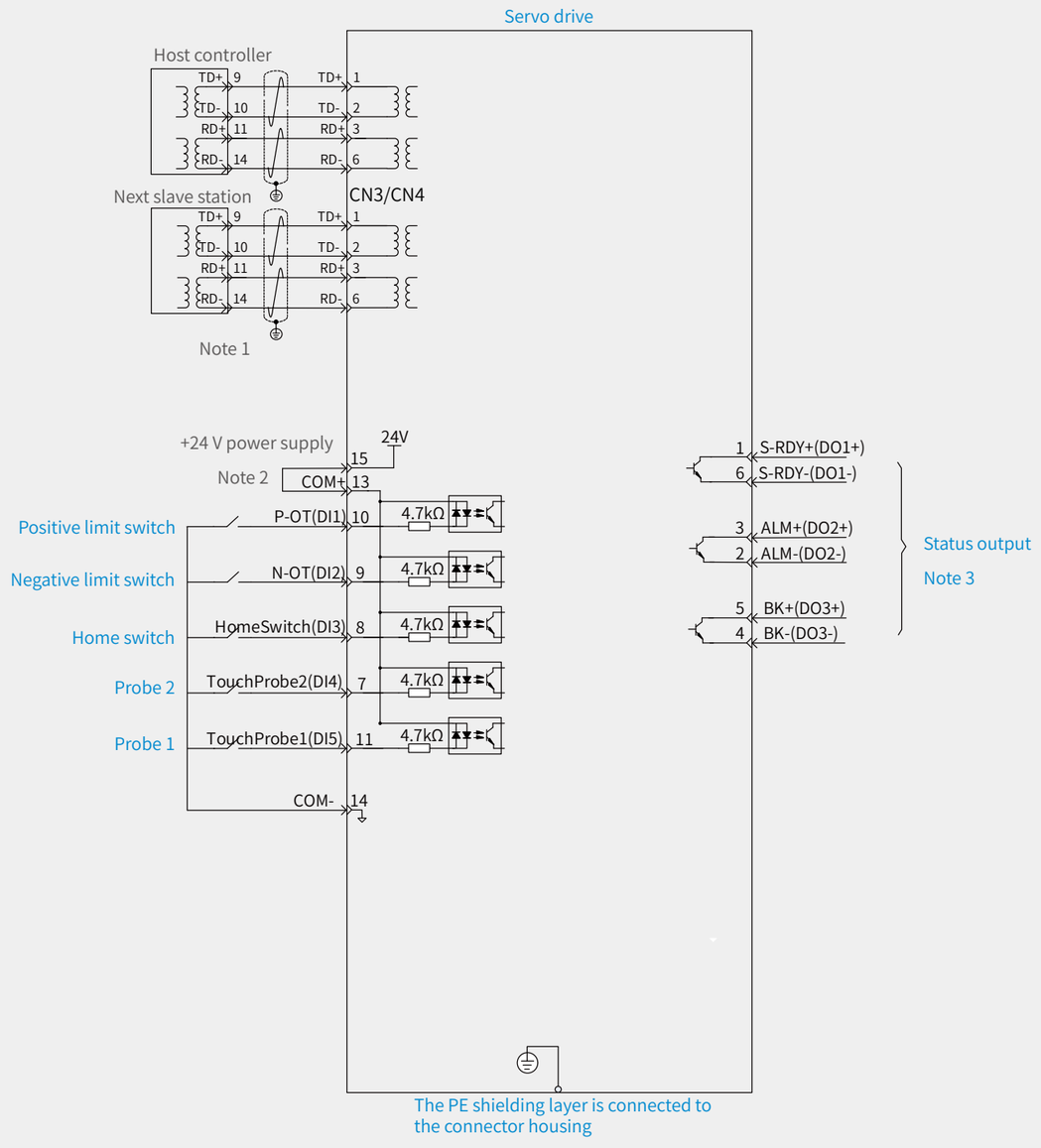

Note 1: Please select Cat5e shielded twisted pair for LAN cables. Both direct connect and crosswise Ethernet cables are acceptable.
Note 2: Internal +24V power supply, voltage range: 20 to 28 V, maximum output current: 200 mA.
Note 3: A user needs to provide the power supply for DOs, with voltage range 5–24 V.The DO terminals support 30 VDC voltage and 50 mA current to the maximum.

SV660N Wiring and Port Definition

Connection between SV660P/A/C servo drive and peripheral equipment(SIZE-A/B)

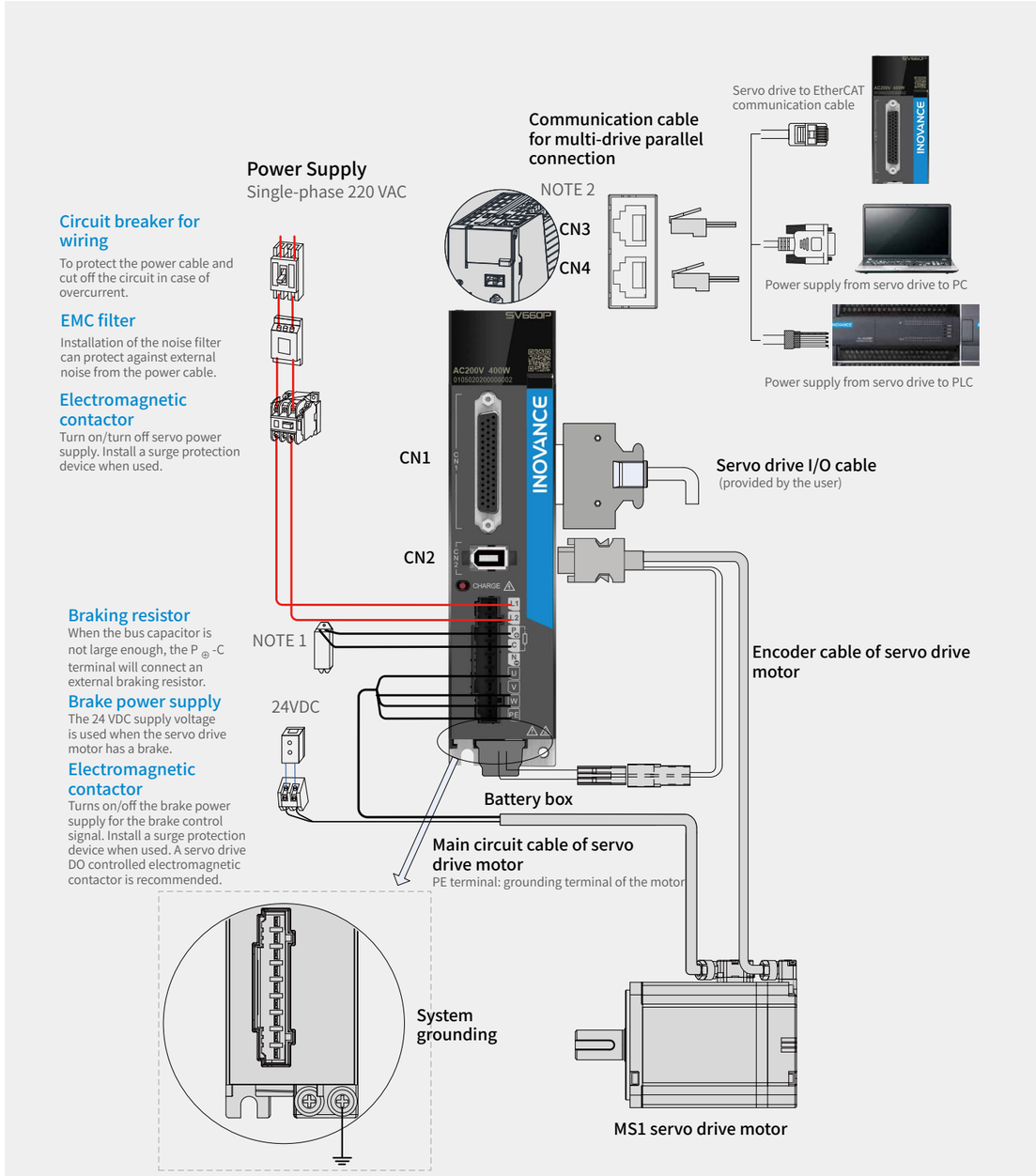

Note 1: An external brake resistor must be connected between P ⊕ and C.
Note 2: CN3 and CN4 are identical communication ports with the same pin definition, and either can be used.

SV660N Wiring and Port Definition

Connection between SV660P/A/C servo drive and peripheral equipment(SIZE-C/D)

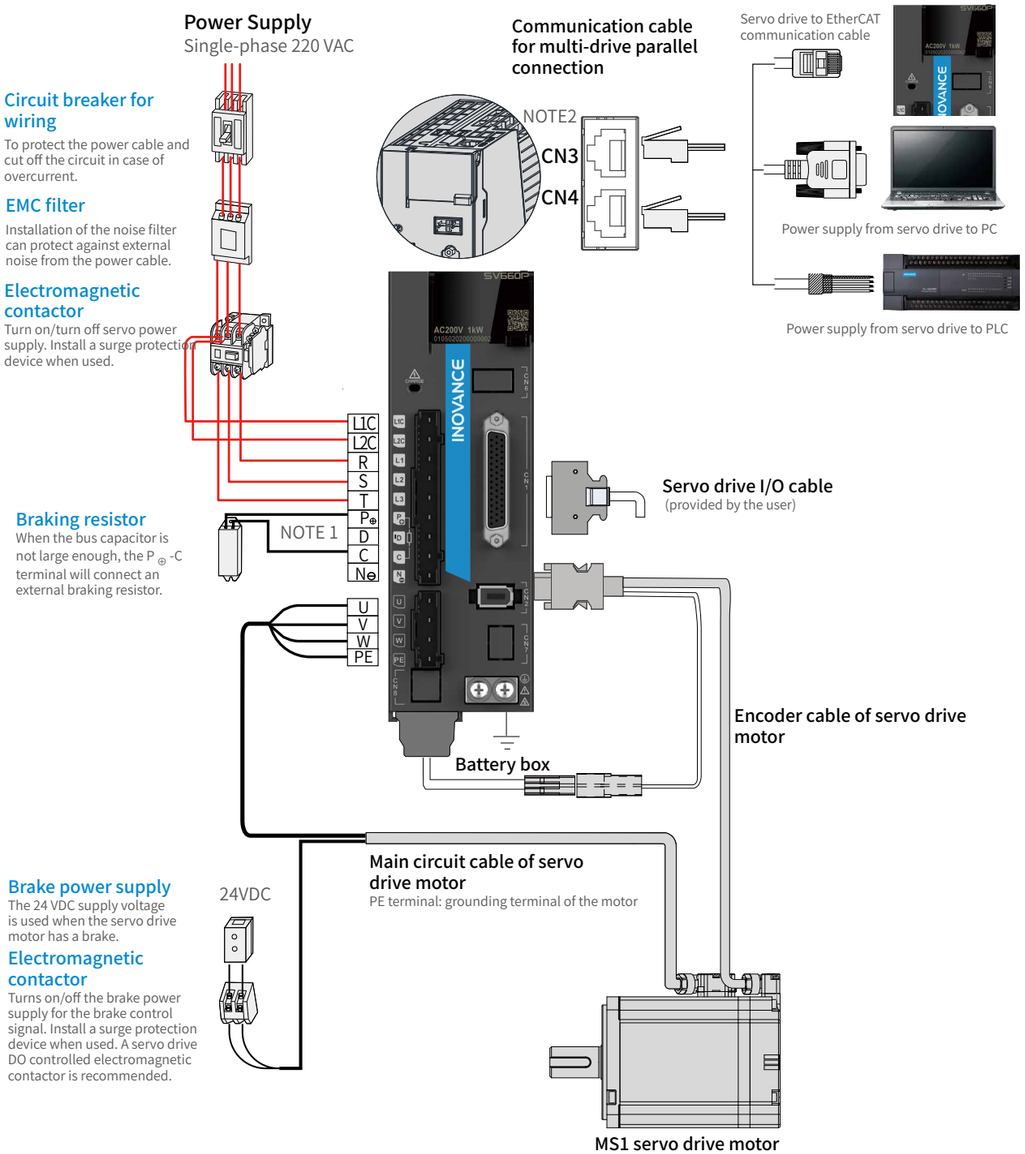

Note 1: Remove the jumper between terminals P⊕ and D of the servo drive when connecting a regenerative resistor.
Note 2: CN3 and CN4 are identical communication ports with the same pin definition, and either can be used.
Note 3: This figure illustrates the three-phase 220 V drive.

SV660N Wiring and Port Definition

Connection between SV660P/A/C servo drive and peripheral equipment(SIZE-E)

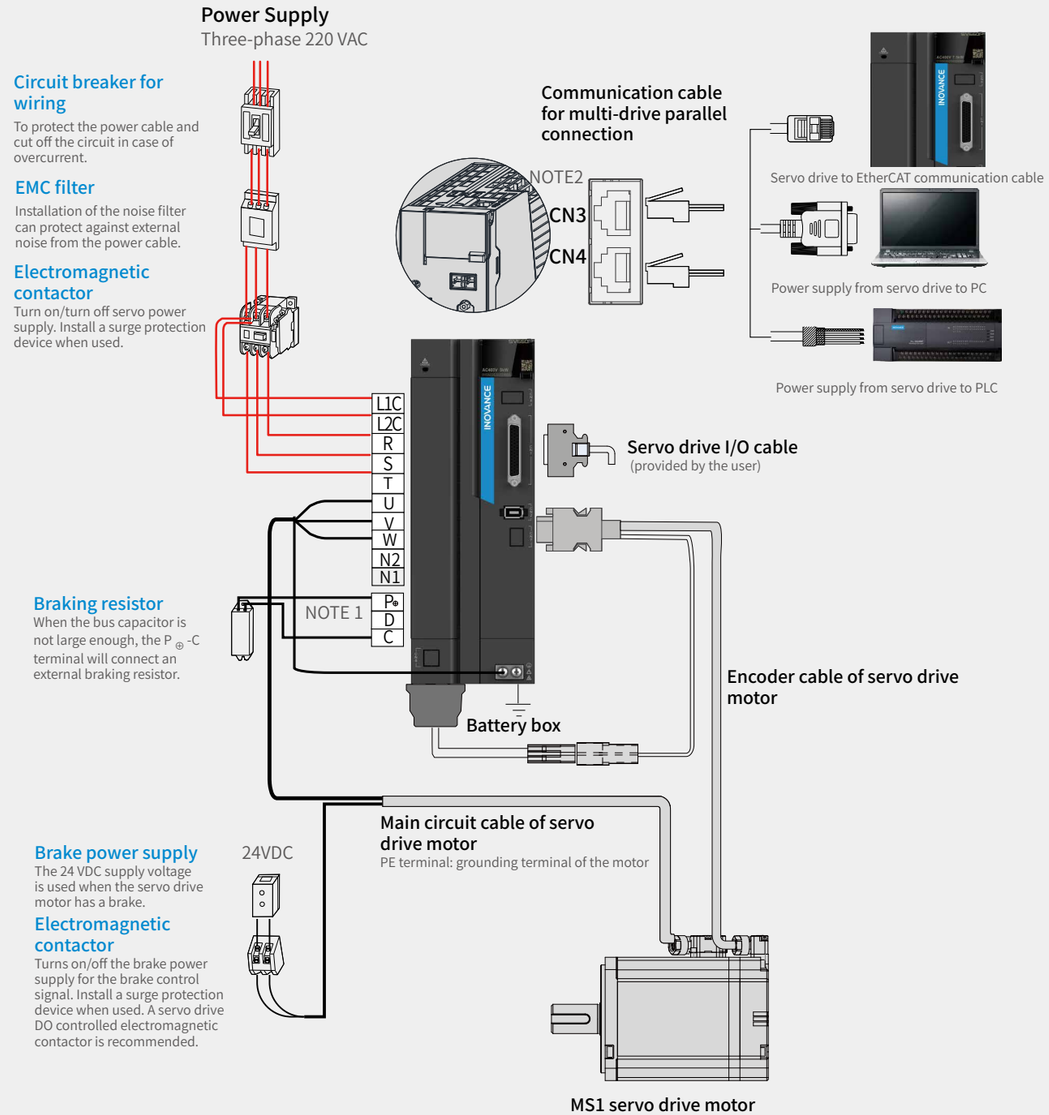

Note 1: Remove the jumper between terminals P⊕ and D of the servo drive when connecting a regenerative resistor.
Note 2: CN3 and CN4 are identical communication ports with the same pin definition, and either can be used.
Note 3: This figure illustrates the three-phase 220 V drive.

SV660P/A/C Servo Drive Port Definition

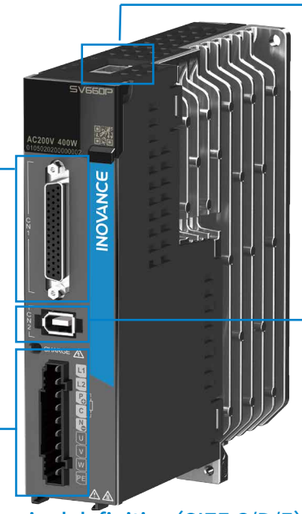

Definition of CN1 control terminal

Signal Name		Default Function	Pin No.	Terminal Function
	DI1	P — OT	9	Positive limit switch
	DI2	N — OT	10	Negative limit switch
	DI3	INHIBIT	34	Position reference inhibited
	DI4	ALM-RST	8	Alarm reset (edge valid)
	DI5	S-ON	33	Servo ON
	DI8	Home Switch	30	Home switch
	DI9	Retain	12	-
	+24V		17	Internal 24 V power supply, voltage range +20-28V, max. output current 200 mA
	COM-		14	
	COM+		11	Common terminal of DI terminals
	DO1+	S-RDY+	7	Servo drive ready
	DO1-	S-RDY-	6	
	DO2+	COIN+	5	Positioning completed
	DO2-	COIN-	4	
	DO3+	BK+	3	Brake output
	DO3-	BK-	2	
	DO4+	ALM+	1	Fault output
	DO4-	ALM-	26	
	DO5+	Home Attain+	28	Homing completed
	DO5-	Home Attain-	27	

Signal Name		Pin No.	Terminal Function	
Position referen	PULS+	41	Low-speed pulse command mode: differential drive input Open collector mode	Pulse input form: direction + pulse Phase A and Phase B quadrature pulse CW/ CCW pulse
	PULS-	43		
	SIGN+	37		
	SIGN-	39		
	HPULS+	38	High-speed reference pulse input	
	HPULS-	36		
	HSIGN+	42	High-speed position reference symbols	
	HSIGN-	40		
	PULLHI	35	External power input terminal of pulse reference	
	GND	29	Signal ground	

Note: High-speed pulse/position and low-speed/position cannot be used together.

Main circuit port definition (SIZE A/B)

Terminal Symbol	Name
L1、L2（L1、L2、L3）	Main circuit power input terminals
P⊕、N⊖	Bus terminals of servo drive
P⊕、C（P⊕、D、C）	Terminals for connecting external regenerative resistor
U、V、W	Servo motor connection terminals
PE	Grounding terminal

Note: The numerical value in parentheses is the main circuit definition of SIZE-B.

Main circuit terminal definition (SIZE C/D/E)

Terminal Symbol	Name
L1C、L2C	Control circuit power input terminals
R、S、T	Main circuit power input terminals
P⊕、N⊖	Bus terminals of servo drive (SIZE-C/ SIZE-D)
P⊕、D、C	Terminals for connecting external regenerative resistor
U、V、W	Servo motor connection terminals
PE	Grounding terminal (SIZE-C/SIZE-D)
N2、N1	Reactor connecting terminals (SIZE-E)

CN3 and CN4 communication terminals

A		B	
Pin No.	Signal Name	Pin No.	Signal Name
8	GND	8	GND
1	CANH	1	CANH
2	CANL	2	CANL
3	CANGND	3	CANGND
4	RS485+	4	RS485+
5	RS485-	5	RS485-
6	RS232-TXD	6	RS232-TXD
7	RS232-RXD	7	RS232-RXD
Housing	PE (shielded layer)	Housing	PE (shielded layer)

Note: Only SV660A and SV660C are provided with CAN interfaces.

Definition of CN2 encoder terminal

Pin No.	Signal Name	
	23bit bus type	23bit absolute value
1	+5V	+5V
2	0V	0V
3	-	-
4	-	-
5	PS+	PS+
6	PS-	PS-
Housing	PE	PE

Wiring Diagram in Control Mode

Wiring diagram in position mode

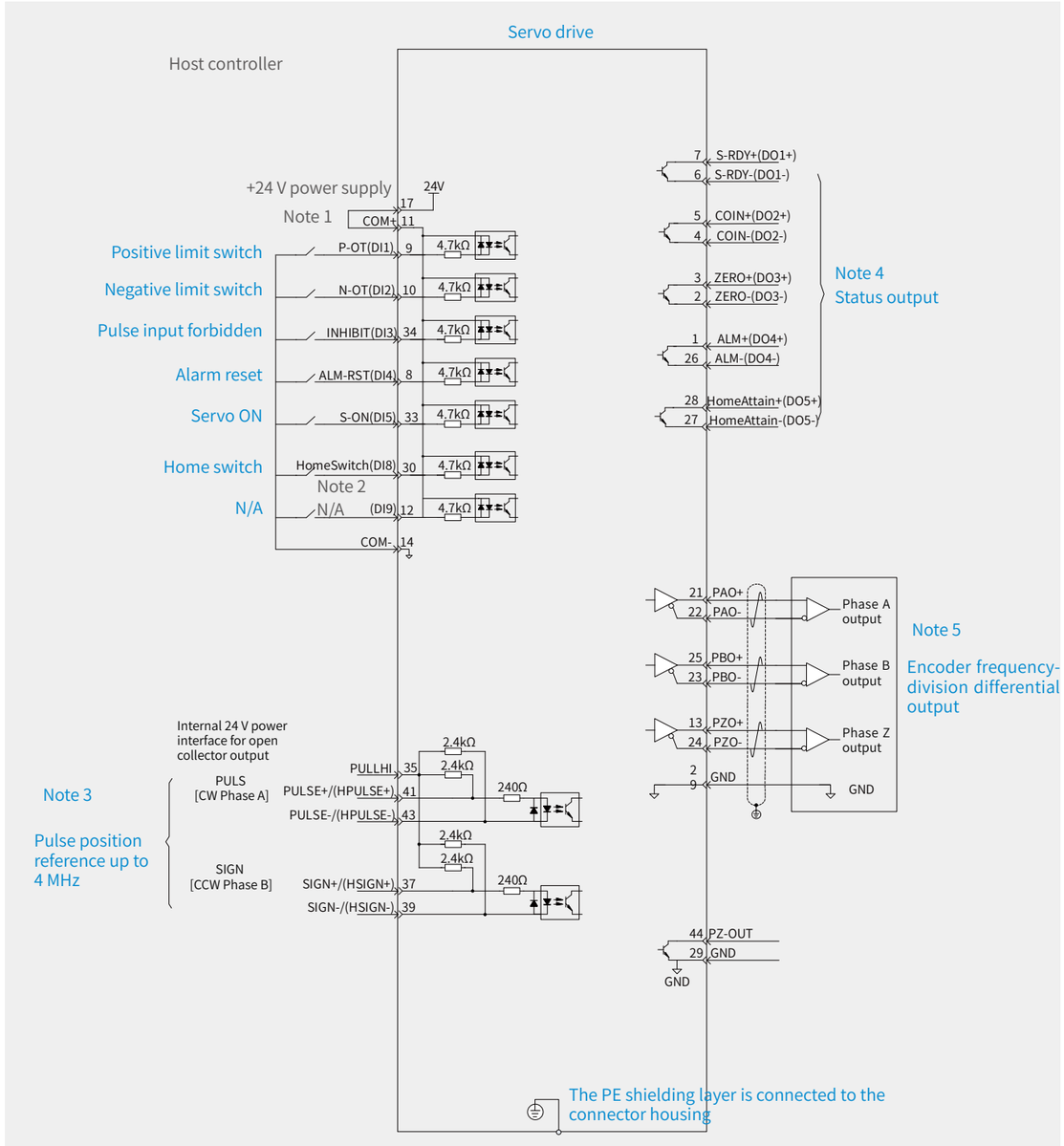

Note 1: Internal +24 V power supply, voltage range: 20 to 28 V, maximum output current: 200 mA.
Note 2: DI8 and DI9 are high-speed DIs. Use them according to their functions allocated.
Note 3: Use the shielded twisted pair as the cables of the pulse terminals, with both ends of the shielded layer tied to PE. Connect GND to the signal ground of the host controller reliably.
Note 4: A user needs to provide the power supply for DOs, with voltage range 5–24 V. The DO terminals support 30 VDC voltage and 50 mA current to the maximum.
Note 5: Use the shielded twisted pair as the encoder fre-quency-division cables, with both ends of the shielded layer tied to PE. Connect GND to the signal ground of the host controller reliably.

SV660N Series Drive Installation Dimensions

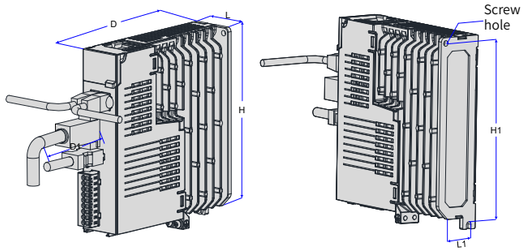

Structure	L (mm)	H (mm)	D (mm)	L1 (mm)	H1 (mm)	D1 (mm)	Screw Hole	Tightening Torque (Nm)	Weight (kg)
SIZE A	40	170	150	28	161	75	2-M4	0.6~1.2	0.8
SIZE B	50	170	173	37	161	75	2-M4	0.6~1.2	1.0
SIZE C	55±1	170	173±1	44	160	75	2-M4	0.6~1.2	1.3
SIZE D	80±1	170	183	71	160	75	3-M4	0.6~1.2	1.8
SIZE E	90	250	230	78	240.5	75	4-M4	0.6~1.2	3.6

SIZE A drive outline dimensions

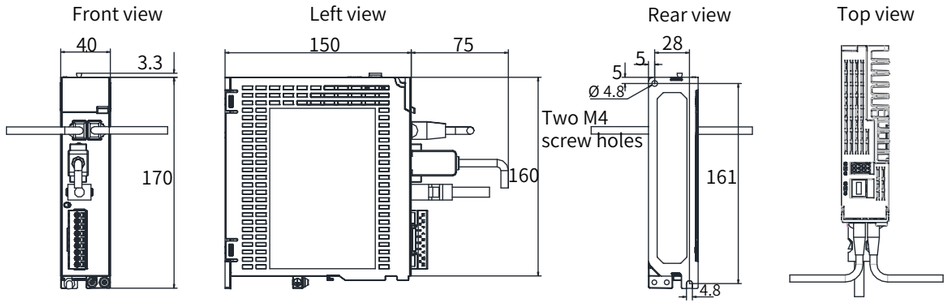

Units: mm

Fixing screw: two M4 screws; recommended tightening torque: 1.2 N · m

SIZE B drive outline dimensions

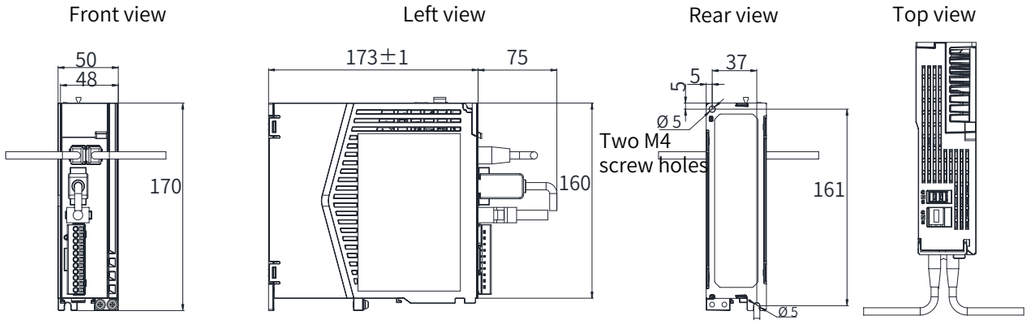

Units: mm

Fixing screw: two M4 screws; recommended tightening torque: 1.2 N · m

SIZE C drive outline dimensions

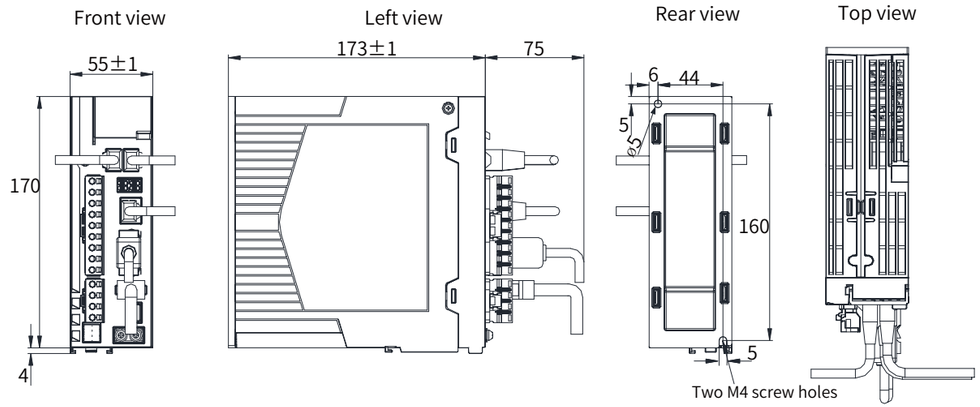

Units: mm

Fixing screw: two M4 screws; recommended tightening torque: 1.2 N · m

SIZE D drive outline dimensions

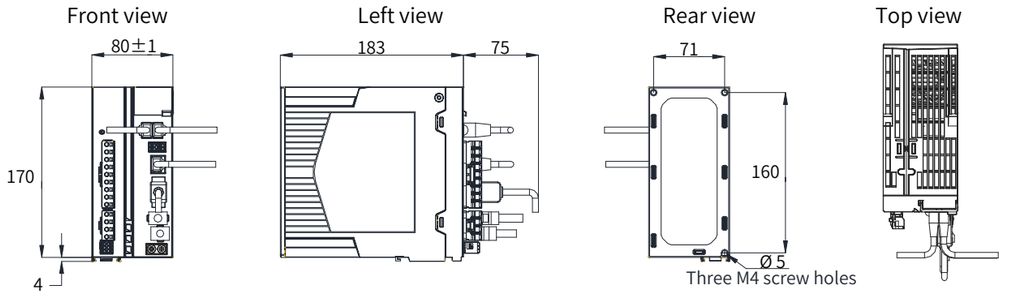

Units: mm

Fixing screw: three M4 screws; recommended tightening torque: 1.2 N · m

SIZE E drive outline dimensions

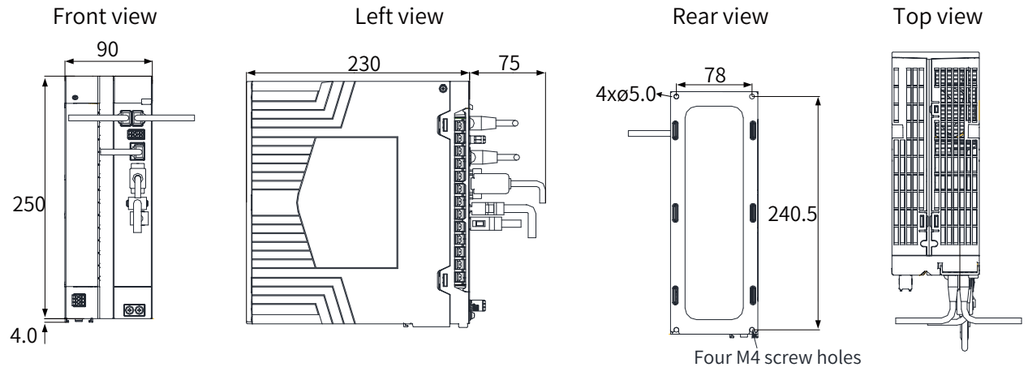

Units: mm

Fixing screw: four M4 screws; recommended tightening torque: 1.2 N · m

SV660P/A/C Series Drive Installation Dimensions

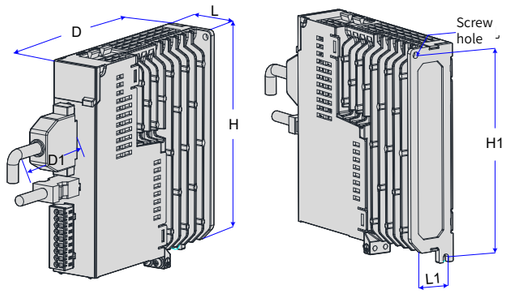

Structure	L (mm)	H (mm)	D (mm)	L1 (mm)	H1 (mm)	D1 (mm)	Screw Hole	Tightening Torque (Nm)	Weight (kg)
SIZE A	40	170	150	28	161	75	2-M4	0.6~1.2	0.8
SIZE B	50	170	173	37	161	75	2-M4	0.6~1.2	1.0
SIZE C	55±1	170	173±1	44	160	75	2-M4	0.6~1.2	1.3
SIZE D	80±1	170	183	71	160	75	3-M4	0.6~1.2	1.8
SIZE E	90	250	230	78	240.5	75	4-M4	0.6~1.2	3.6

SIZE A drive outline dimensions

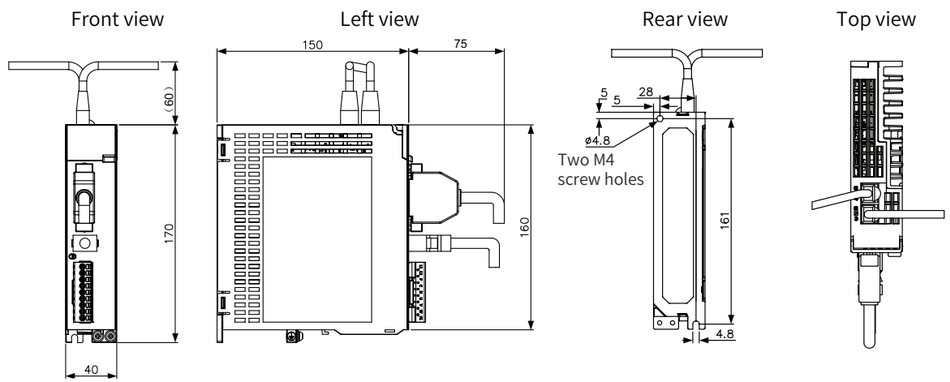

Units: mm

Fixing screw: two M4 screws; recommended tightening torque: 1.2 N · m

SIZE B drive outline dimensions

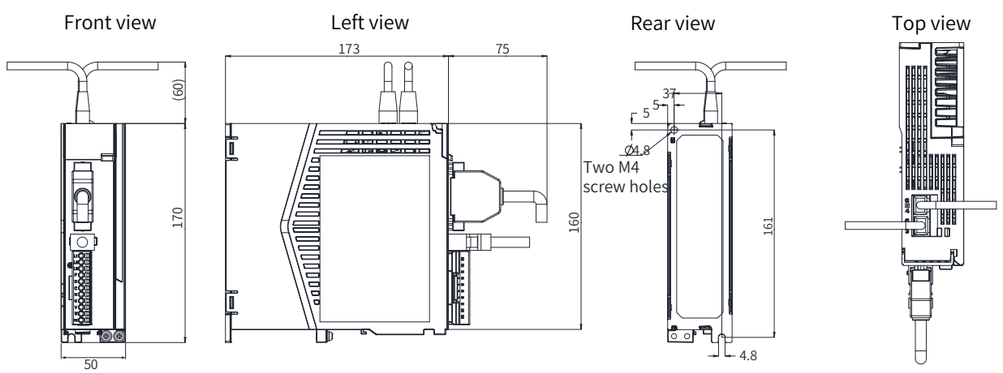

Units: mm

Fixing screw: twoM4 screws; recommended tightening torque: 1.2 N · m

SIZE C drive outline dimensions

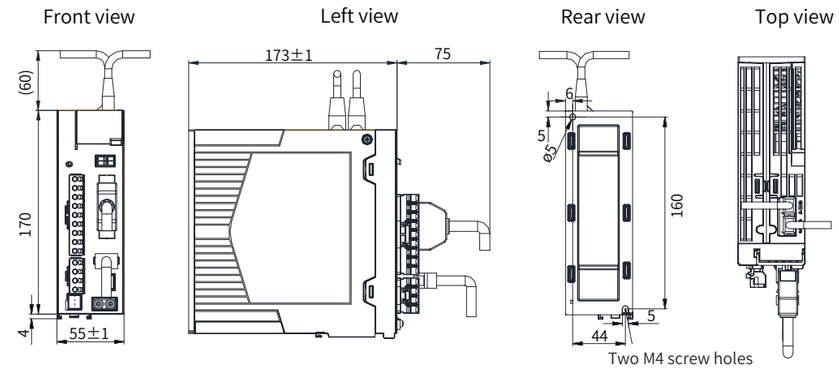

Units: mm

Fixing screw: two M4 screws; recommended tightening torque: 1.2 N · m

SIZE D drive outline dimensions

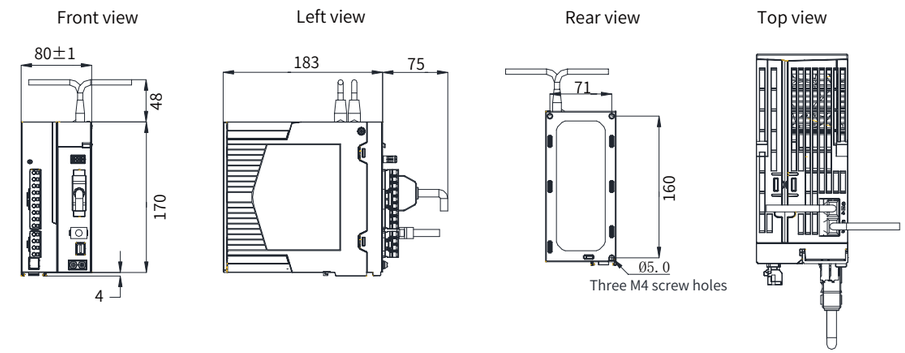

Units: mm

Fixing screw: two M4 screws; recommended tightening torque: 1.2 N · m

SIZE E drive outline dimensions

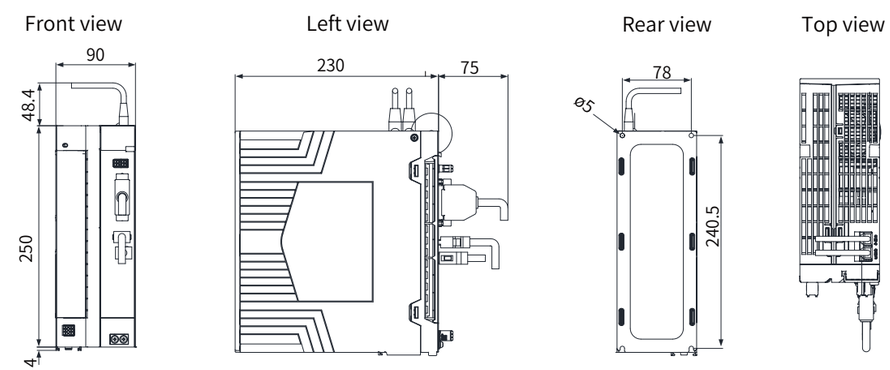

Units: mm

Fixing screw: twoM4 screws; recommended tightening torque: 1.2 N · m

Servo MS1 Motor specifications

Motor specifications - Natural cooling

Model	Rated Output (kW)[1]	Rated Torque (N·m)	Max. Instantaneous Torque (N·m)	Rated Current (Arms)	Max. Instantaneous Current (Arms)	Rated Speed (rpm)	Max. Speed (rpm)	Torque Parameter (N·m/Arms)	Rotor Moment of Inertia (10^{-4}kg·m^2)	Voltage (V)
Rated values of MS1H1 Series(Vn=3000rpm，Vmax=6000rpm)										
MS1H1-05B30CB-A330Z(-S)	0.05	0.16	0.56	1.3	4.7	3000	6000	0.15	0.026 (0.028)	220
MS1H1-05B30CB-A332Z(-S)										
MS1H1-10B30CB-A330Z(-S)	0.1	0.32	1.12	1.3	4.7			0.26	0.041 (0.043)	
MS1H1-10B30CB-A332Z(-S)										
MS1H1-20B30CB-A331Z(-S)	0.2	0.64	2.24	1.5	5.8			0.46	0.207 (0.220)	
MS1H1-20B30CB-A334Z(-S)										
MS1H1-40B30CB-A331Z(-S)	0.4	1.27	4.46	2.8	10.1			0.53	0.376 (0.390)	
MS1H1-40B30CB-A334Z(-S)										
MS1H1-55B30CB-A331Z(-S)	0.55	1.75	6.13	3.8	15.0			0.49	1.06	
MS1H1-75B30CB-A331Z(-S)	0.75	2.39	8.36	4.8	16.9			0.58	1.38 (1.43)	
MS1H1-75B30CB-A334Z(-S)										
MS1H1-10C30CB-A331Z(-S)	1.0	3.18	11.1	7.6	28.0			0.46	1.75	
Rated values of MS1H2 Series(Vn=3000rpm，Vmax=6000/5000rpm)										
MS1H2-10C30CB-A331Z	1.0	3.18	9.54	7.5	23.00	3000	6000	0.47	1.87 (3.12)	220
MS1H2-10C30CB-A334Z										
MS1H2-15C30CB-A331Z	1.5	4.90	14.7	10.8	32.00		5000	0.54	2.46 (3.71)	
MS1H2-15C30CB-A334Z										
MS1H2-10C30CD-A331Z	1.0	3.18	9.54	3.65	11.00		6000	0.89	1.87 (3.12)	380
MS1H2-10C30CD-A334Z										
MS1H2-15C30CD-A331Z	1.5	4.90	14.7	4.50	14.00		5000	1.07	2.46 (3.71)	
MS1H2-15C30CD-A334Z										
MS1H2-20C30CD-A331Z	2.0	6.36	19.1	5.89	20.00		5000	1.19	3.06 (4.31)	
MS1H2-20C30CD-A334Z(-S4)*										
MS1H2-25C30CD-A331Z	2.5	7.96	23.9	7.56	25.00			1.2	3.65 (4.90)	
MS1H2-25C30CD-A334Z(-S4)*										
MS1H2-30C30CD-A331Z	3.0	9.8	29.4	10.00	30.00			1.2	7.72 (10.22)	
MS1H2-30C30CD-A334Z(-S4)*										
MS1H2-40C30CD-A331Z	4.0	12.6	37.8	13.60	40.80			1.12	12.1 (14.6)	
MS1H2-40C30CD-A334Z(-S4)*										
MS1H2-50C30CD-A331Z	5.0	15.8	47.6	16.00	48.00			1.29	15.4 (17.9)	
MS1H2-50C30CD-A334Z(-S4)*										

Servo MS1 Motor specifications

Motor specifications - Natural cooling

Model	Rated Output (kW)[1]	Rated Torque (N·m)	Max. Instantaneous Torque (N·m)	Rated Current (Arms)	Max. Instantaneous Current (Arms)	Rated Speed (rpm)	Max. Speed (rpm)	Torque Parameter (N·m/Arms)	Rotor Moment of Inertia (10^{-4}kg·m^2)	Voltage (V)
Rated values of MS1H3 Series(Vn=1500rpm，Vmax=3000）系列额定值规格										
MS1H3-85B15CB-A331Z	0.85	5.39	13.5	6.60	16.50	1500	3000	0.95	13.3 (14)	220
MS1H3-85B15CB-A334Z										
MS1H3-13C15CB-A331Z	1.3	8.34	20.85	10.00	25.00			0.95	17.8 (18.5)	
MS1H3-13C15CB-A334Z										
MS1H3-85B15CD-A331Z	0.85	5.39	13.5	3.30	8.25			1.87	13.3 (14)	380
MS1H3-85B15CD-A334Z										
MS1H3-13C15CD-A331Z	1.3	8.34	20.85	5.00	12.50			1.87	17.8 (18.5)	
MS1H3-13C15CD-A334Z										
MS1H3-18C15CD-A331Z	1.8	11.5	28.75	6.60	16.50	1500	3000	1.87	25 (25.7)	380
MS1H3-18C15CD-A334Z										
MS1H3-29C15CD-A331Z	2.9	18.6	46.5	11.90	29.75			1.82	55 (57.2)	
MS1H3-29C15CD-A334Z										
MS1H3-44C15CD-A331Z	4.4	28.4	71.1	16.50	40.50			1.90	88.9 (90.8)	
MS1H3-44C15CD-A334Z										
MS1H3-55C15CD-A331Z	5.5	35.0	87.6	20.85	52.00			1.74	107 (109.5)	
MS1H3-55C15CD-A334Z										
MS1H3-75C15CD-A331Z	7.5	48.0	119	25.70	65.00			1.99	141 (143.1)	
MS1H3-75C15CD-A334Z										
Rated values of MS1H4 Series(Vn=3000rpm, Vmax=6000rpm）										
MS1H4-40B30CB-A331Z(-S)	0.4	1.27	4.46	2.80	10.10	3000	6000	0.53	0.657 (0.667)	220
MS1H4-40B30CB-A334Z(-S)										
MS1H4-75B30CB-A331Z(-S)	0.75	2.39	8.36	4.80	16.9			0.58	2 (2.012)	
MS1H4-75B30CB-A334Z(-S)										

Note:
1.Models except for frame 40 are provided with oil seals.
2.10% derated for motors with oil seals.
3.Parameters in parentheses are for motors with brakes. Note: If the ratio of the load inertia to the moment of inertia is greater than 10 times, please consult your local Inovance vendor.
4. (-S4)* means that the motor works in S4 system, in which the motor load factor is not higher than 70%.

Overview of Servo Drive Motor

Servo drive motor torque - Speed characteristics

MS1H1 Low inertia Small capacity

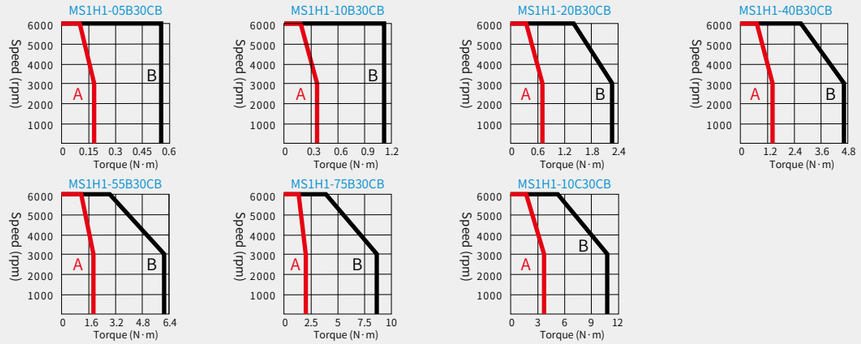

MS1H2 Low inertia Medium capacity

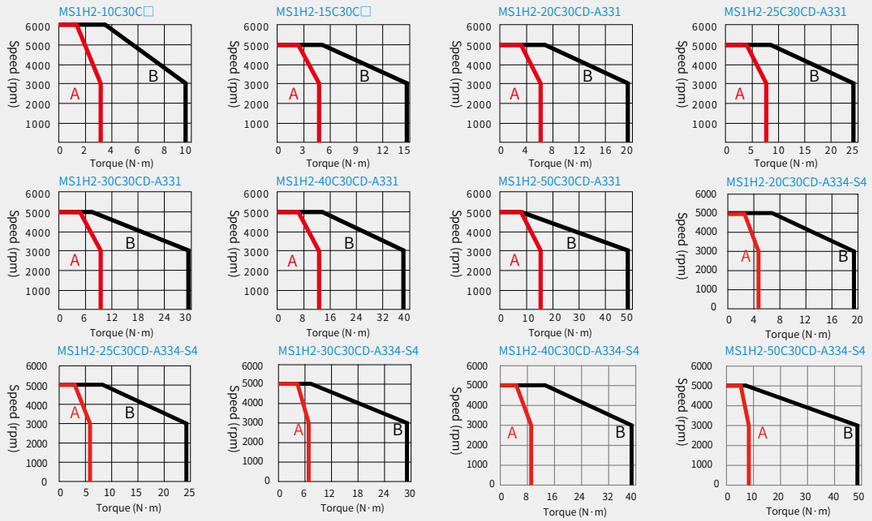

Overview of Servo Drive Motor

Servo drive motor torque - Speed characteristics

MS1H3 Medium inertia Medium capacity

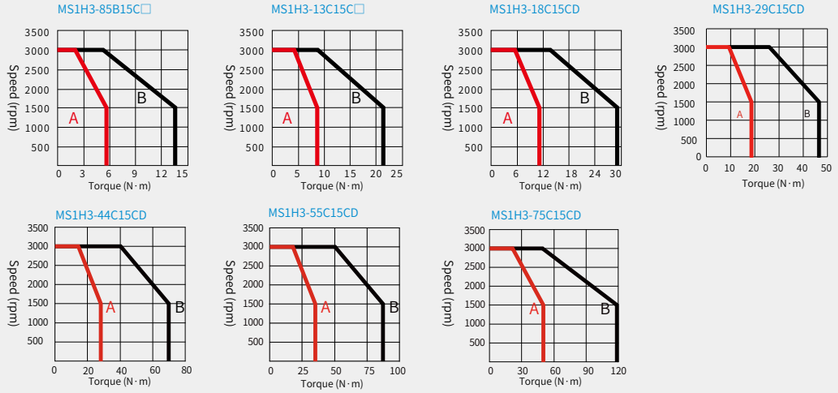

MS1H4 Medium inertia Small capacity

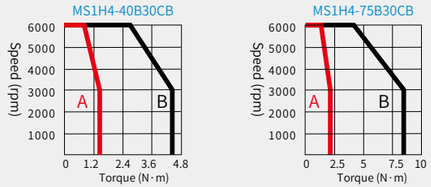

Note: A (continuous work area) B (temporary work area)

Servo Drive Wiring

Connection between SV660 servo drive and peripheral equipment

Definitions of terminals at motor side for flanges 40, 60 and 80 (terminal type)

6-pin connector kit for cables at power side		7-pin connector kit for encoder at motor side		6-pin male connector at drive side	
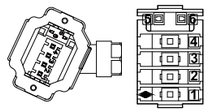		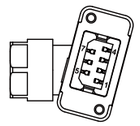		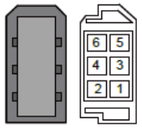	
Pin No.	Signal Name	Pin No.	Signal Name	Pin No.	Signal Name
1	PE	1	PS+	1	+5V
2	W	2	PS-	2	0V
3	V	3	DC+	5	PS+
4	U	4	DC-	6	PS-
5	Brake (non positive or negative sensitive)	5	+5V	Shell	PE
		6	0V		
6		7	PE		

Note: The terminal motor connector kit is not available for sale separately

Definitions of terminals at motor side for flanges 40, 60 and 80 (lead wire type)

6-pin connector kit for cables at power side		9-pin connector kit for encoder at motor side		6-pin male connector at drive side	
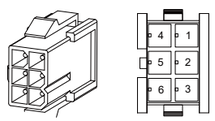		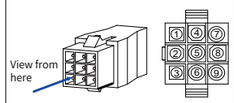		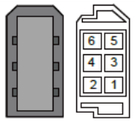 Left: Mating surface Right: Welding surface	
Pin No.	Signal Name	Pin No.	Signal Name	Pin No.	Signal Name
1	U	1	Battery+	1	+5V
2	V	4	Battery-	2	0V
4	W	3	PS+	5	PS+
5	PE	6	PS-	6	PS-
3	Brake (non positive or negative sensitive)	9	+5V	Shell	PE
		8	GND		
6		7	Shield		

Servo Drive Wiring

Connection between SV660 servo drive and peripheral equipment

Definitions of terminals at motor side for flanges 40, 60 and 80 (lead wire type)

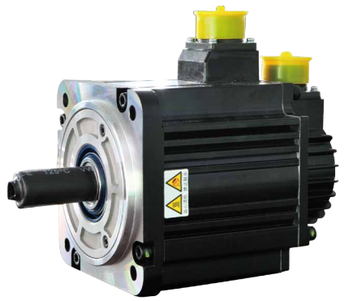

20-18 aviation plug for cables at power side for flange 130			20-29 aviation plug for encoder cables for flange 130		
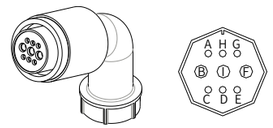			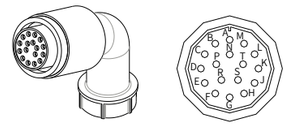		
(MIL — DTL — 5015 series 3108E20 — 18S) Aviation plug for military use			(MIL — DTL — 5015 series 3108E20 — 29S) Aviation plug for military use		
Terminal Definition			Pin No.	Signal Name	
Pin No.	Signal Name	Color		23bit bus type	23bit absolute value
B	U	Blue	A	PS+	PS+
I	V	Black	B	PS-	PS-
F	W	Red	C	-	-
G	PE	Yellow/Green	D	-	-
C	Brake (non positive or negative sensitive)	Red	E	-	Battery+
			F	-	Battery-
E		Black	G	+5V	+5V
			H	GND	GND
			J	Shield	Shield

Definitions of terminals at motor side for flange 180

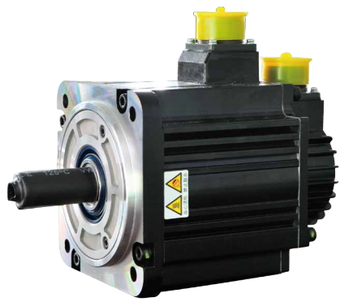

20-18 aviation plug for cables at power side for flange 180			20-29 aviation plug for encoder cables for flange 180		
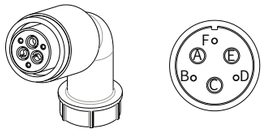			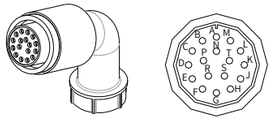		
(MIL — DTL — 5015 series 3108E20 — 18S) Aviation plug for military use			((MIL — DTL — 5015 series 3108E20 — 29S) Aviation plug for military use		
Terminal Definition			Pin No.	Signal Name	
Pin No.	Signal Name	Color		23bit bus type	23bit absolute value
B	U	Blue	A	PS+	PS+
I	V	Black	B	PS-	PS-
F	W	Red	C	-	-
G	PE	Yellow/Green	D	-	-
C	Brake (non positive or negative sensitive)	Red	E	-	Battery+
			F	-	Battery-
E		Black	G	+5V	+5V
			H	GND	GND
			J	Shield	Shield

Overview of Servo Drive Motor

Outline and installation dimensions for servo drive motor

MS1H1 (Vn=3000rpm, Vmax=6000rpm) series outline dimensions (unit: mm)

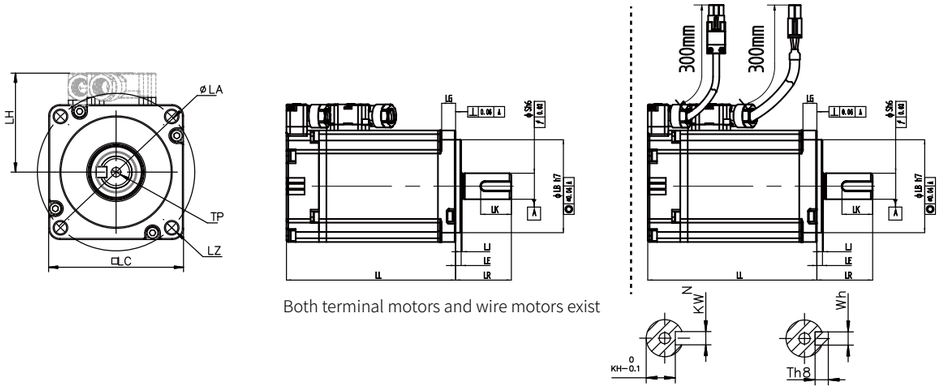

Both terminal motors and wire motors exist

Shaft end dimensions Keyed shaft end dimensions

Motor model	LC (mm)	LL (mm)	LR (mm)	LA (mm)	LZ (mm)	LH (mm)	LG (mm)	LE (mm)	LJ (mm)
MS1H1-05B30CB-A330Z(-S)	40	65 (96)	25±0.5	46	2-ϕ4.5	34	5	2.5±0.5	0.5±0.35
MS1H1-05B30CB-A332Z(-S)									
MS1H1-10B30CB-A330Z(-S)	40	77.5 (109)	25±0.5	46	2-ϕ4.5	34	5	2.5±0.5	0.5±0.35
MS1H1-10B30CB-A332Z(-S)									
MS1H1-20B30CB-A331Z(-S)	60	72.5 (100)	30±0.5	70	4-ϕ5.5	44	7.5	3±0.5	0.5±0.35
MS1H1-20B30CB-A334Z(-S)									
MS1H1-40B30CB-A331Z(-S)	60	91 (119)	30±0.5	70	4-ϕ5.5	44	7.5	3±0.5	0.5±0.35
MS1H1-40B30CB-A334Z(-S)									
MS1H1-55B30CB-A331Z(-S)	80	96.2	35±0.5	90	4-ϕ7	54	7.7	3±0.5	0.5±0.35
MS1H1-75B30CB-A331Z(-S)	80	107 (140)	35±0.5	90	4-ϕ7	54	7.7	3±0.5	0.5±0.35
MS1H1-75B30CB-A334Z(-S)									
MS1H1-10C30CB-A331Z(-S)	80	118.2	35±0.5	90	4-ϕ7	54	7.7	3±0.5	0.5±0.35

Motor model	S (mm)	LB (mm)	TP (mm)	LK (mm)	KH (mm)	KW (mm)	W (mm)	T (mm)	Weight (kg)
MS1H1-05B30CB-A330Z(-S)	8	30	M3×6	15.5	6.2	3	3	3	0.39 (0.50)
MS1H1-05B30CB-A332Z(-S)									
MS1H1-10B30CB-A330Z(-S)	8	30	M3×6	15.5	6.2	3	3	3	0.45 (0.64)
MS1H1-10B30CB-A332Z(-S)									
MS1H1-20B30CB-A331Z(-S)	14	50	M5×8	16.5	11	5	5	5	0.78 (1.16)
MS1H1-20B30CB-A334Z(-S)									
MS1H1-40B30CB-A331Z(-S)	14	50	M5×8	16.5	11	5	5	5	1.11 (1.48)
MS1H1-40B30CB-A334Z(-S)									
MS1H1-55B30CB-A331Z(-S)	19	70	M6×20	25	15.5	6	6	6	1.85
MS1H1-75B30CB-A331Z(-S)	19	70	M6×20	25	15.5	6	6	6	2.18 (2.82)
MS1H1-75B30CB-A334Z(-S)									
MS1H1-10C30CB-A331Z(-S)	19	70	M6×20	25	15.5	6	6	6	2.55

Note: Data in parentheses is the value of the servo drive motor with a brake.
For dimension diagrams of -S motors, consult your Inovance vendor.

Overview of Servo Drive Motor

Outline and installation dimensions for servo drive motor

MS1H2 (Vn=3000 rpm, Vmax=6000/5000 rpm) series outline dimensions (unit: mm)

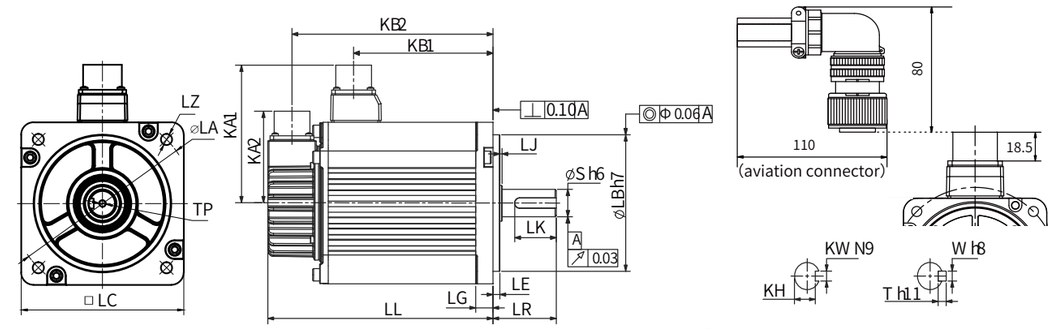

Shaft end dimensions Keyed shaft end dimensions

Motor model	LC (mm)	LL (mm)	LR (mm)	LA (mm)	LZ (mm)	KA1 (mm)	KB1 (mm)	KA2 (mm)	KB2 (mm)	LG (mm)	LE (mm)	LJ (mm)	LB (mm)
MS1H2-10C30CB(D)-A331Z	100	164 (213.5)	45±1	115	4-ϕ7	88	94.5 (101)	74	143.5 (192.5)	10	5±0.3	2.5±0.75	95
MS1H2-10C30CB(D)-A334Z													
MS1H2-15C30CB(D)-A331Z	100	189 (239)	45±1	115	4-ϕ7	88	119.5 (128)	74	168.5 (219.5)	10	5±0.3	2.5±0.75	95
MS1H2-15C30CB(D)-A334Z													
MS1H2-20C30CD-A331Z	100	214 (265)	45±1	115	4-ϕ7	88	144.5 (153)	74	193.5 (244)	10	5±0.3	2.5±0.75	95
MS1H2-20C30CD-A334Z(-S4)													
MS1H2-25C30CD-A331Z	100	240.5 (290)	45±1	115	4-ϕ7	88	169.5 (178)	74	218.5 (269)	10	5±0.3	2.5±0.75	95
MS1H2-25C30CD-A334Z(-S4)													
MS1H2-30C30CD-A331Z	130	209.5 (265.5)	63±1	145	4-ϕ9	103	136 (139)	74	188.5 (244.5)	14	6±0.3	0.5±0.75	110
MS1H2-30C30CD-A334Z(-S4)													
MS1H2-40C30CD-A331Z	130	252 (308)	63±1	145	4-ϕ9	103	178.5 (181.5)	74	231 (287)	14	6±0.3	0.5±0.75	110
MS1H2-40C30CD-A334Z(-S4)													
MS1H2-50C30CD-A331Z	130	294.5 (350.5)	63±1	145	4-ϕ9	103	221 (224)	74	273.5 (329.5)	14	6±0.3	0.5±0.75	110
MS1H2-50C30CD-A334Z(-S4)													

Motor model	S (mm)	TP (mm)	LK (mm)	KH (mm)	KW (mm)	W (mm)	T (mm)	Weight (kg)	Connector	Power Side (including dynamic brake side)	Encoder Side
MS1H2-10C30CB(D)-A331Z	24	M8×16	36	20 $^{0}_{-0.2}$	8	8	7	5.11 (6.41)	Military spec.	MI-DTL-5015 series 3102E20-18P	MI-DTL-5015 series 3102E20-29P
MS1H2-10C30CB(D)-A334Z											
MS1H2-15C30CB(D)-A331Z	24	M8×16	36	20 $^{0}_{-0.2}$	8	8	7	6.22 (7.52)			
MS1H2-15C30CB(D)-A334Z											
MS1H2-20C30CD-A331Z	24	M8×16	36	20 $^{0}_{-0.2}$	8	8	7	7.39 (8.7)			
MS1H2-20C30CD-A334Z(-S4)											
MS1H2-25C30CD-A331Z	24	M8×16	36	20 $^{0}_{-0.2}$	8	8	7	8.55 (9.8)			
MS1H2-25C30CD-A334Z(-S4)											
MS1H2-30C30CD-A331Z	28	M8×20	54	24 $^{0}_{-0.2}$	8	8	7	10.73 (13.2)	Military spec.	MI-DTL-5015 series 3102E20-18P	MI-DTL-5015 系列 3102E20-29P
MS1H2-30C30CD-A334Z(-S4)											
MS1H2-40C30CD-A331Z	28	M8×20	54	24 $^{0}_{-0.2}$	8	8	7	15.43 (17.9)			
MS1H2-40C30CD-A334Z(-S4)											
MS1H2-50C30CD-A331Z	28	M8×20	54	24 $^{0}_{-0.2}$	8	8	7	16.2 (18.7)			
MS1H2-50C30CD-A334Z(-S4)											

Note: Data in parentheses is the value of the servo drive motor with a brake.
(-S4) means that the motor works in S4 system, in which the motor load factor is not higher than 70%.

Overview of Servo Drive Motor

Outline and installation dimensions for servo drive motor

MS1H3 (Vn=1500 rpm, Vmax=3000 rpm) series outline dimensions (unit: mm)

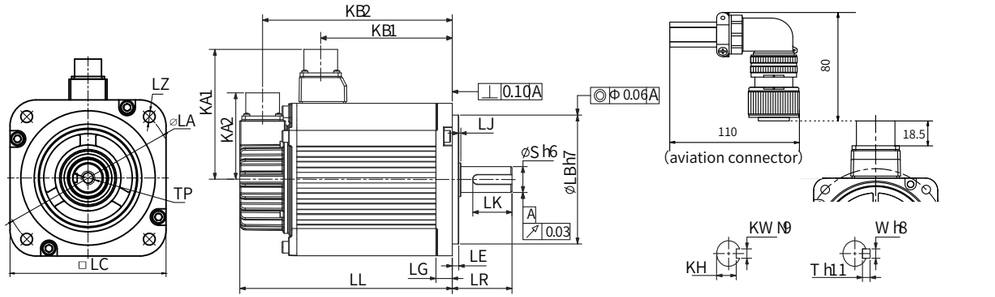

Shaft end dimensions Keyed shaft end dimensions

Motor model	LC (mm)	LL (mm)	LR (mm)	LA (mm)	LZ (mm)	KA1 (mm)	KB1 (mm)	KA2 (mm)	KB2 (mm)	LG (mm)	LE (mm)	LJ (mm)	LB (mm)
MS1H3-85B15CB(D)-A331Z	130	146 (182)	55±1	145	4-Φ9	103	72.5	74	125 (161)	14	4	0.5±0.75	110
MS1H3-85B15CB(D)-A334Z													
MS1H3-13C15CB(D)-A331Z	130	163 (199)	55±1	145	4-Φ9	103	89.5	74	142 (178)	14	4	0.5±0.75	110
MS1H3-13C15CB(D)-A334Z													
MS1H3-18C15CD-A331Z	130	181 (217)	55±1	145	4-Φ9	103	107.5	74	160 (196)	14	4	0.5±0.75	110
MS1H3-18C15CD-A334Z													
MS1H3-29C15CD-A331Z	180	197 (273)	79±1	200	4-ϕ13.5	138	136 (134)	74	177 (253)	18	3.2±0.3	0.3±0.75	114.3
MS1H3-29C15CD-A334Z													
MS1H3-44C15CD-A331Z	180	230 (307)	79±1	200	4-ϕ13.5	138	169 (167)	74	210 (286)	18	3.2±0.3	0.3±0.75	114.3
MS1H3-44C15CD-A334Z													
MS1H3-55C15CD-A331Z	180	274 (350)	113±1	200	4-ϕ13.5	138	213 (211)	74	254 (330)	18	3.2±0.3	0.3±0.75	114.3
MS1H3-55C15CD-A334Z													
MS1H3-75C15CD-A331Z	180	330 (407)	113±1	200	4-ϕ13.5	138	269 (267)	74	310 (386)	18	3.2±0.3	0.3±0.75	114.3
MS1H3-75C15CD-A334Z													

Motor model	S (mm)	TP (mm)	LK (mm)	KH (mm)	KW (mm)	W (mm)	T (mm)	Weight (kg)	Connector	Power Side (including dynamic brake side)	Encoder Side
MS1H3-85B15CB(D)-A331Z	22	M6×20	36	$18^{0}_{-0.2}$	8	8	7	7 (8)	Military spec.	MI-DTL-5015 series 3102E20-18P	MI-DTL-5015 series 3102E20-29P
MS1H3-85B15CB(D)-A334Z											
MS1H3-13C15CB(D)-A331Z	22	M6×20	36	$18^{0}_{-0.2}$	8	8	7	8 (9.5)			
MS1H3-13C15CB(D)-A334Z											
MS1H3-18C15CD-A331Z	22	M6×20	36	$18^{0}_{-0.2}$	8	8	7	9.5 (11)			
MS1H3-18C15CD-A334Z											
MS1H3-29C15CD-A331Z	35	M12×25	65	$30^{0}_{-0.2}$	10	10	8	15 (25)			
MS1H3-29C15CD-A334Z											
MS1H3-44C15CD-A331Z	35	M12×25	65	$30^{0}_{-0.2}$	10	10	8	19.5 (30)	Military spec.	MI-DTL-5015 series 3102E20-22P	MI-DTL-5015 series 3102E20-29P
MS1H3-44C15CD-A334Z											
MS1H3-55C15CD-A331Z	42	M16×32	96	$37^{0}_{-0.2}$	12	12	8	28 (38)			
MS1H3-55C15CD-A334Z											
MS1H3-75C15CD-A331Z	42	M16×32	96	$37^{0}_{-0.2}$	12	12	8	32 (42)			
MS1H3-75C15CD-A334Z											

Note: Data in parentheses is the value of the servo drive motor with a brake.

Overview of Servo Drive Motor

Outline and installation dimensions for servo drive motor

MS1H4 series outline dimensions (unit: mm)

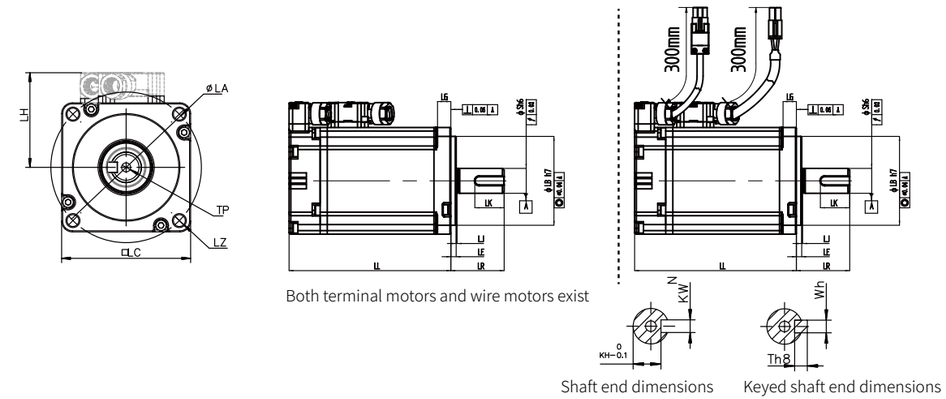

Both terminal motors and wire motors exist

Shaft end dimensions Keyed shaft end dimensions

Motor model	LC (mm)	LL (mm)	LR (mm)	LA (mm)	LZ (mm)	LH (mm)	LG (mm)	LE (mm)	LJ (mm)
MS1H4-40B30CB-A331Z(-S)	60	105 (128)	30±0.5	70	4-Φ5.5	44	7.5	3±0.5	0.5±0.35
MS1H4-40B30CB-A334Z(-S)									
MS1H4-75B30CB-A331Z(-S)	80	117.5 (147.5)	35±0.5	90	4-Φ7	54	7.7	3±0.5	0.5±0.35
MS1H4-75B30CB-A334Z(-S)									

Motor model	LB (mm)	S (mm)	TP (mm)	LK (mm)	KH (mm)	KW (mm)	W (mm)	T (mm)	Weight (kg)
MS1H4-40B30CB-A331Z(-S)	50	14	M5×8	16.5	11	5	5	5	1.27 (1.62)
MS1H4-40B30CB-A334Z(-S)									
MS1H4-75B30CB-A331Z(-S)	70	19	M6×20	25	15.5	6	6	6	2.40 (3.04)
MS1H4-75B30CB-A334Z(-S)									

Note: Data in parentheses is the value of the servo drive motor with a brake.
For dimension diagrams of -S motors, consult your Inovance vendor.

Selection of Matching Cables

Motor mod-el	Cable Name		Cable Size	Cable Length L (mm)	Cable Appearance Diagram
MS1H1/ MS1H4 terminal motor	Front outlet	Power cable for motor without brake	S6-L-M107-3.0	3000	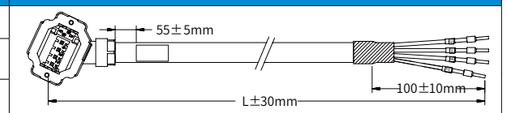
			S6-L-M107-5.0	5000	
			S6-L-M107-10.0	10000	
		Power cable for motor with brake	S6-L-B107-3.0	3000	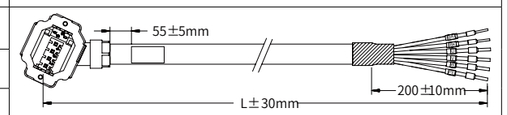
			S6-L-B107-5.0	5000	
			S6-L-B107-10.0	10000	
		Cable for single-turn absolute motor encoder	S6-L-P114-3.0	3000	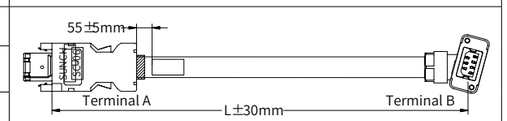
			S6-L-P114-5.0	5000	
			S6-L-P114-10.0	10000	
		Cable for multi-turn absolute A3**Z motor encoder	S6-L-P124-3.0	3000	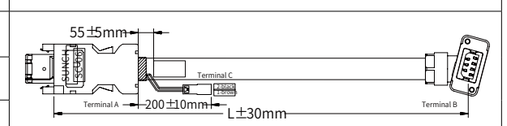
			S6-L-P124-5.0	5000	
			S6-L-P124-10.0	10000	
	Rear outlet outlet	Power cable for motor without brake	S6-L-M108-3.0	3000	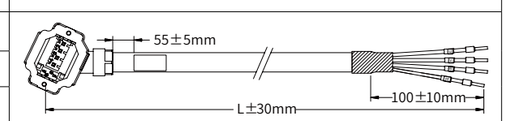
			S6-L-M108-5.0	5000	
			S6-L-M108-10.0	10000	
		Power cable for motor with brake	S6-L-B108-3.0	3000	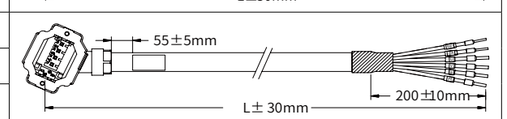
			S6-L-B108-5.0	5000	
			S6-L-B108-10.0	10000	
		Cable for single-turn absolute motor encoder	S6-L-P115-3.0	3000	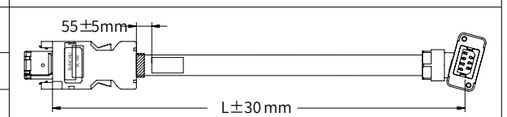
			S6-L-P115-5.0	5000	
			S6-L-P115-10.0	10000	
		Cable for multi-turn absolute A3**Z motor encoder	S6-L-P125-3.0	3000	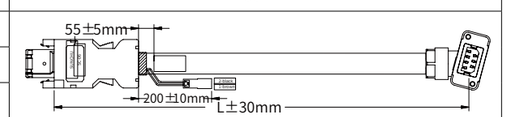
			S6-L-P125-5.0	5000	
			S6-L-P125-10.0	10000	
MS1H1/ MS1H4 lead wire-type motor (-S)	Power cable for motor without brake		S6-L-M100-3.0	3000	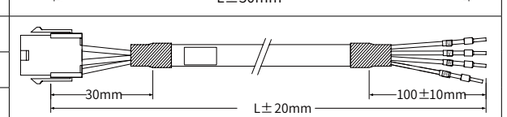
			S6-L-M100-5.0	5000	
			S6-L-M100-10.0	10000	
	Power cable for motor with brake		S6-L-B100-3.0	3000	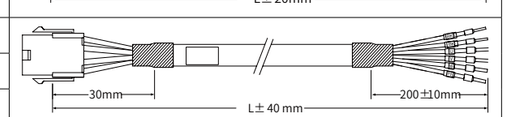
			S6-L-B100-5.0	5000	
			S6-L-B100-10.0	10000	
	Cable for single-turn absolute motor encoder		S6-L-P110-3.0	3000	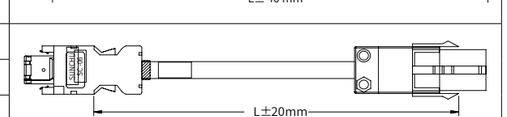
			S6-L-P110-5.0	5000	
			S6-L-P110-10.0	10000	

Motor mod-el	Cable Name	Cable Size	Cable Length L (mm)	Cable Appearance Diagram
MS1H1/ MS1H4 lead wire-type motor (-S)	Cable for multi-turn absolute A3**Z motor encoder	S6-L-P120-3.0	3000	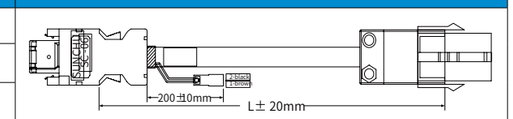
		S6-L-P120-5.0	5000	
		S6-L-P120-10.0	10000	
MS1H2/ MS1H3 motor	Cable for single-turn absolute motor encoder	S6-L-P111-3.0	3000	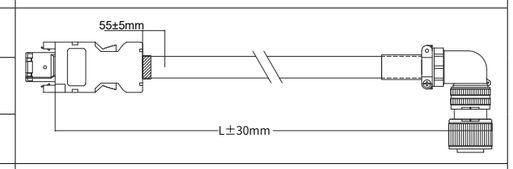
		S6-L-P111-5.0	5000	
		S6-L-P111-10.0	10000	
	Cable for multi-turn absolute A3**Z motor encoder	S6-L-P121-3.0	3000	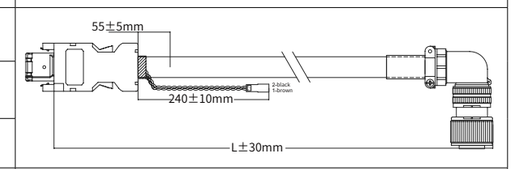
		S6-L-P121-5.0	5000	
		S6-L-P121-10.0	10000	
MS1H2 motor (3kW or below)/ MS1H3 motor (1.8 kW or below)	Power cable for motor without brake	S6-L-M111-3.0	3000	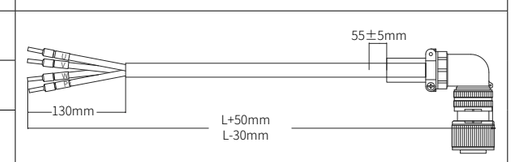
		S6-L-M111-5.0	5000	
		S6-L-M111-10.0	10000	
	Power cable for motor with brake	S6-L-B111-3.0	3000	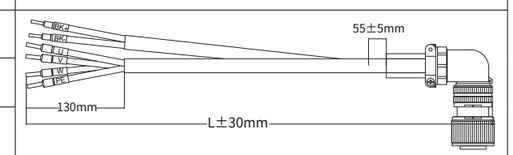
		S6-L-B111-5.0	5000	
		S6-L-B111-10.0	10000	
MS1H3 2.9KW motor	Power cable for motor without brake	S6-L-M112-3.0	3000	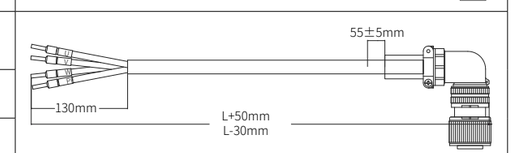
		S6-L-M112-5.0	5000	
		S6-L-M112-10.0	10000	
	Power cable for motor with brake	S6-L-B112-3.0	3000	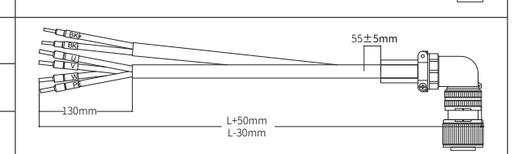
		S6-L-B112-5.0	5000	
		S6-L-B112-10.0	10000	
MS1H2 4 kW/5 kW Motor	Power cable for motor without brake	S6-L-M011-3.0	3000	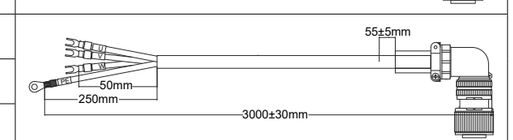
		S6-L-M011-5.0	5000	
		S6-L-M011-10.0	10000	
	Power cable for motor without brake	S6-L-B011-3.0	3000	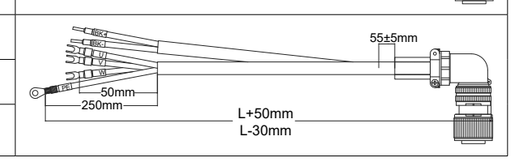
		S6-L-B011-5.0	5000	
		S6-L-B011-10.0	10000	

Motor mod-el	Cable Name	Cable Size	Cable Length L (mm)	Cable Appearance Diagram
MS1H3 Motor (4.4 kW or above)	Power cable for motor without brake	S6-L-M022-3.0	3000	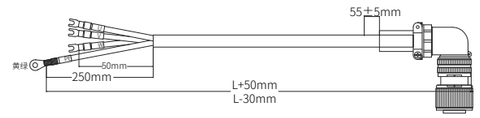
		S6-L-M022-5.0	5000	
		S6-L-M022-10.0	10000	
	Power cable for motor with brake	S6-L-B022-3.0	3000	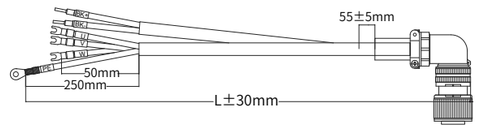
		S6-L-B022-5.0	5000	
		S6-L-B022-10.0	10000	

Selection of Matching Cables and Options

Cable Name	Cable Size	Cable Length L (mm)	Cable Appearance Diagram
SV660P/SV660N Servo drive to PC communication cable	S6-L-T00-3.0	3000	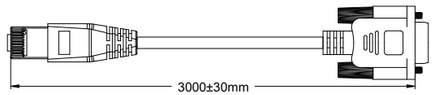
SV660P Servo drive CAN to RS485 devices parallel communication cable	S6-L-T01-0.3	300	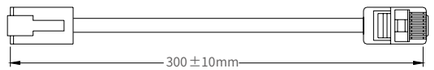
SV660P PLC and servo drive CAN to RS485 devices communication cable	S6-L-T02-2.0	2000	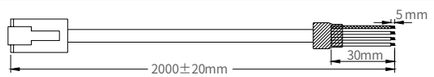
SV660P Termination resistor between servo drive CAN and RS485 interface	S6-L-T03-0.0	-	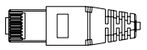
SV660N Parallel connection cable of multi-servo drives	S6-L-T04-0.3	300	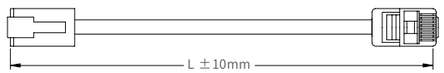
SV660N Communication cable of servo drive to host controller	S6-L-T04-3.0	3000	
Battery kit	S6-C4	-	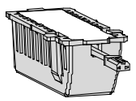
SV660P CN1 terminal (DB44)	S6-C8	-	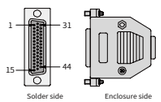 Note: DB44 (MS1 motor is sold separately)

Cable Name	Cable Size	Cable Length L (mm)	Cable Appearance Diagram
SV660N CN1 terminal (DB15)	S6-C6	-	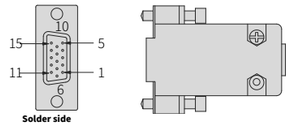
Connector kit for MS1H1/MS1H4 lead wire-type (Z-S) motor	S6-C26	-	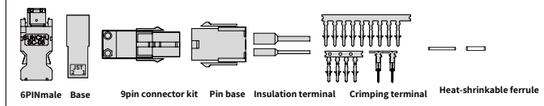
Connector kit for MS1H2/MS1H3 (1.8 kW (inclusive) or below) motor	S6-C29	-	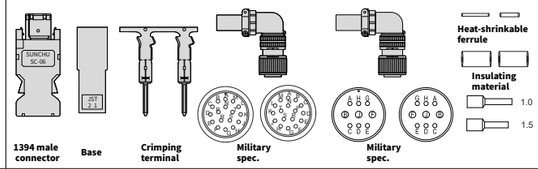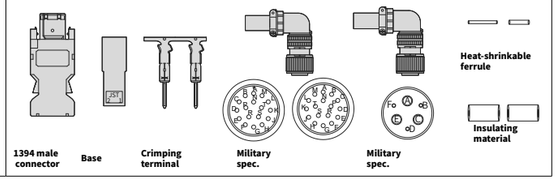
Connector kit for MS1H3 (2.9 kW (inclusive) or above) motor	S6-C39	-