Large Area Scan Series

AX7Q27MP470E

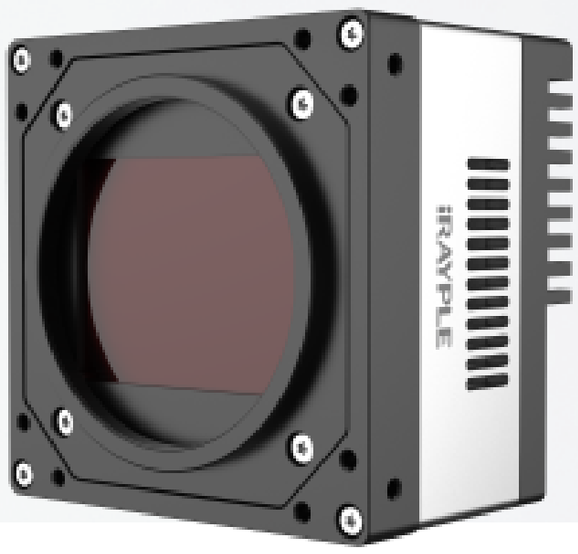

Features

- CXP-12 interface, 4 x 12.5Gbps theoretical transfer bandwidth;
- Support hardware trigger/free run mode;
- Support pixel-by-pixel FFC function;
- Support multiple image data formats output, ROI and etc. ;
- Support PoCXP and DC 24V power supply;
- Conforms to CoaXPress protocol and GenICam standard;
- Conform to CE, KC and RoHS;

Dimensions (mm)

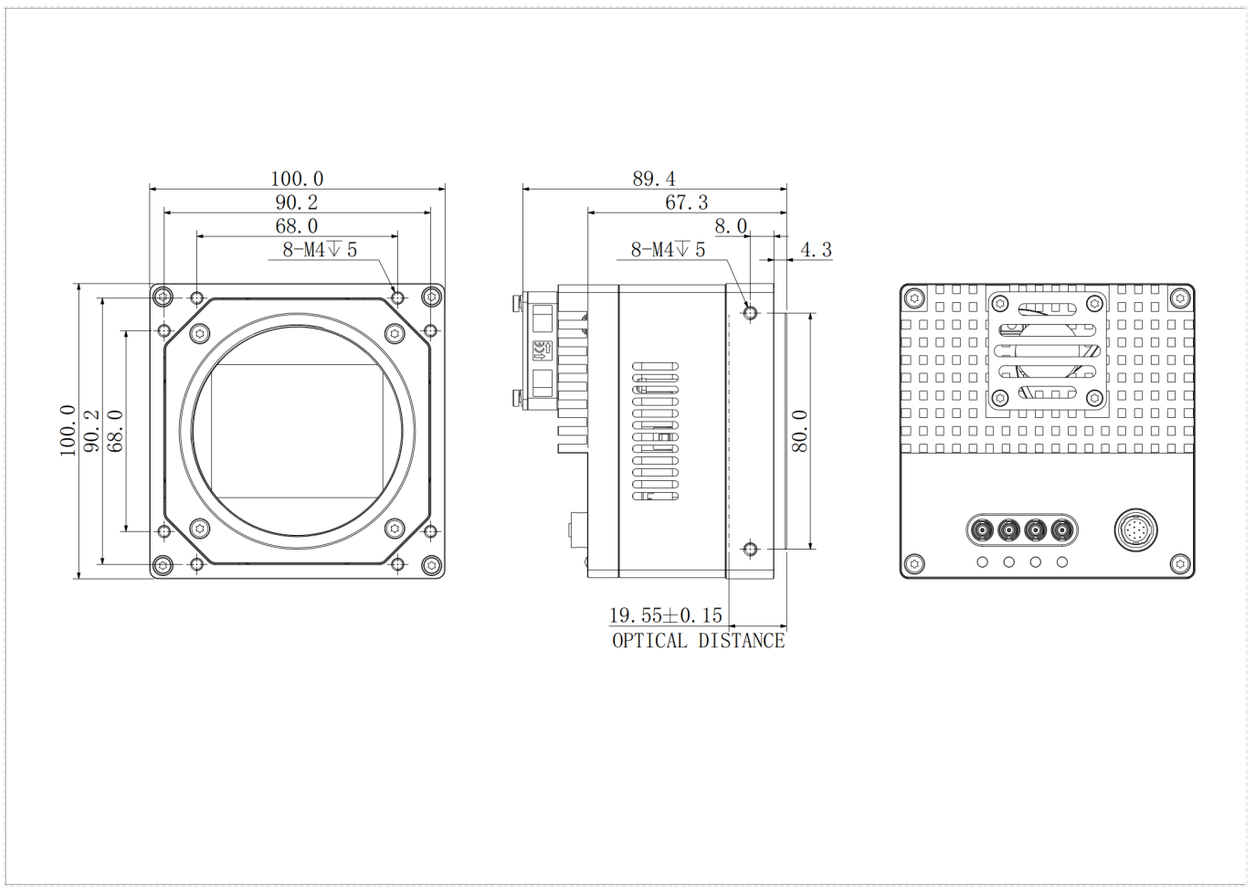

Specification

Model		AX7Q27MP470E
Basic	Sensor	GMAX32152
	Image Sensor	53.0 mm × 29.4 mm CMOS
	Shutter	Global
	Resolution	16544 × 9200
	Frame Rate	16 fps
	Bit Depth	12
	Mono/Color	Mono
	Pixel Size	3.2 μm × 3.2 μm
Image	Pixel	152 MP
	S/N Ratio	> 39.6 dB
	Dynamic Range	67.3 dB
	Image Format	Mono8/10/12
	Binning	Support
	ROI	Support
	X Flip	Support
	Y Flip	Support
	Gain	Analog gain: 1.4x ~ 5.2x, Digital gain: 1x ~ 100x
	Exposure Time	19 μs ~ 15 s
	Trigger Mode	Software Trigger/Hardware Trigger/Free Run Mode
	SPC	Support
Performance	User Setting	Support two sets of user-defined configurations
Port	Port	CXP-12
	GPIO Interface	3x Opto-isolated input, 3x Opto-isolated output
	Lens Mount	M72 × 0.75
Power	Power Supply	DC 24V power supply via 12 Hirose interface，support PoCXP
	Power Consumption	20 W
Structure	Product Dimensions	100 mm × 100 mm × 89.4 mm (not including rear case connector)
	Net Weight	900 g
Environment	Storage Temperature	-30℃~+80℃
	Operating Temperature	-30℃~+50℃

Connector Pin-out

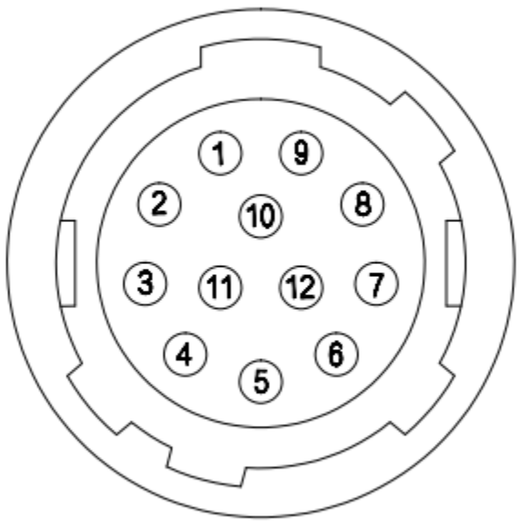

Pin	Signal	Description
1	GND	Power and signal GND
2	Power	Power supply
3	RXD RS232	Serial receive
4	TXD RS232	Serial send
5	Line3	Opto-isolated input
6	Line4	Opto-isolated input
7	Line5	Opto-isolated input
8	OPT_IN_GND	Opto-isolated input GND
9	Line0	Opto-isolated output
10	Line1	Opto-isolated output
11	Line2	Opto-isolated output
12	OPT_OUT_GND	Opto-isolated output GND
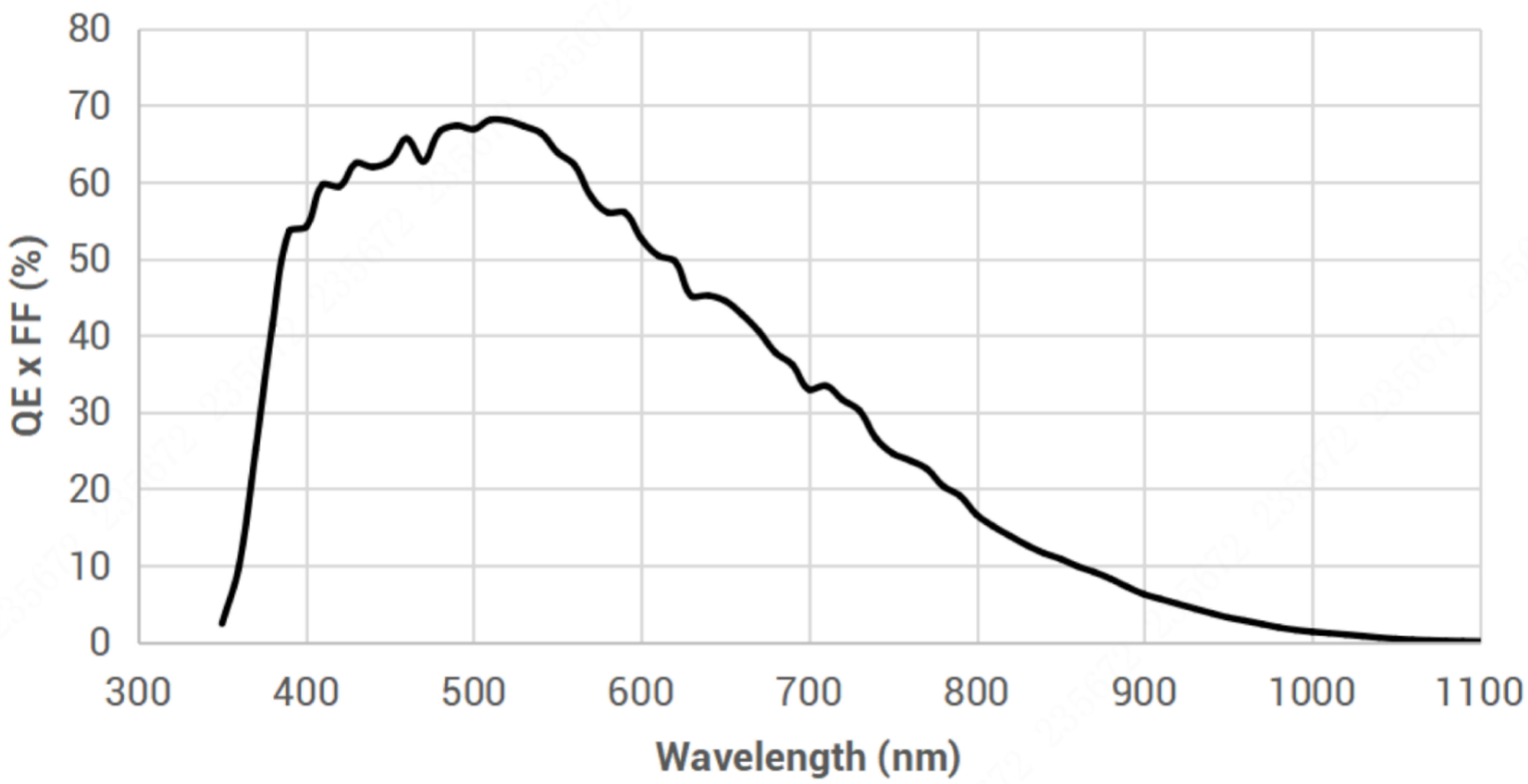
Spectrogram