Large Area Scan Series

AX5K37MT250E

Features

- 10GigE interface, provides up to 10Gbps effective bandwidth;
- A patented flatness mediation scheme to eliminate area defocusing;
- Excellent heat dissipation design, precise temperature control and constant temperature maintenance;
- 1GB on-board cache for data transmission or image resend;
- Support Software Trigger/Hardware Trigger/Free Run mode;
- Support user-defined ROI, horizontal mirror and vertical mirror;
- Support ISP functions including Auto Exposure/Auto Gain/Auto BlackLevel/Gamma Correction/LUT etc.;
- Mono cameras support auto contrast adjustment;
- Support for FFC function to provide more uniform picture quality;
- Support fan speed adaptive function for setting the target temperature of the sensor;

Dimensions (mm)

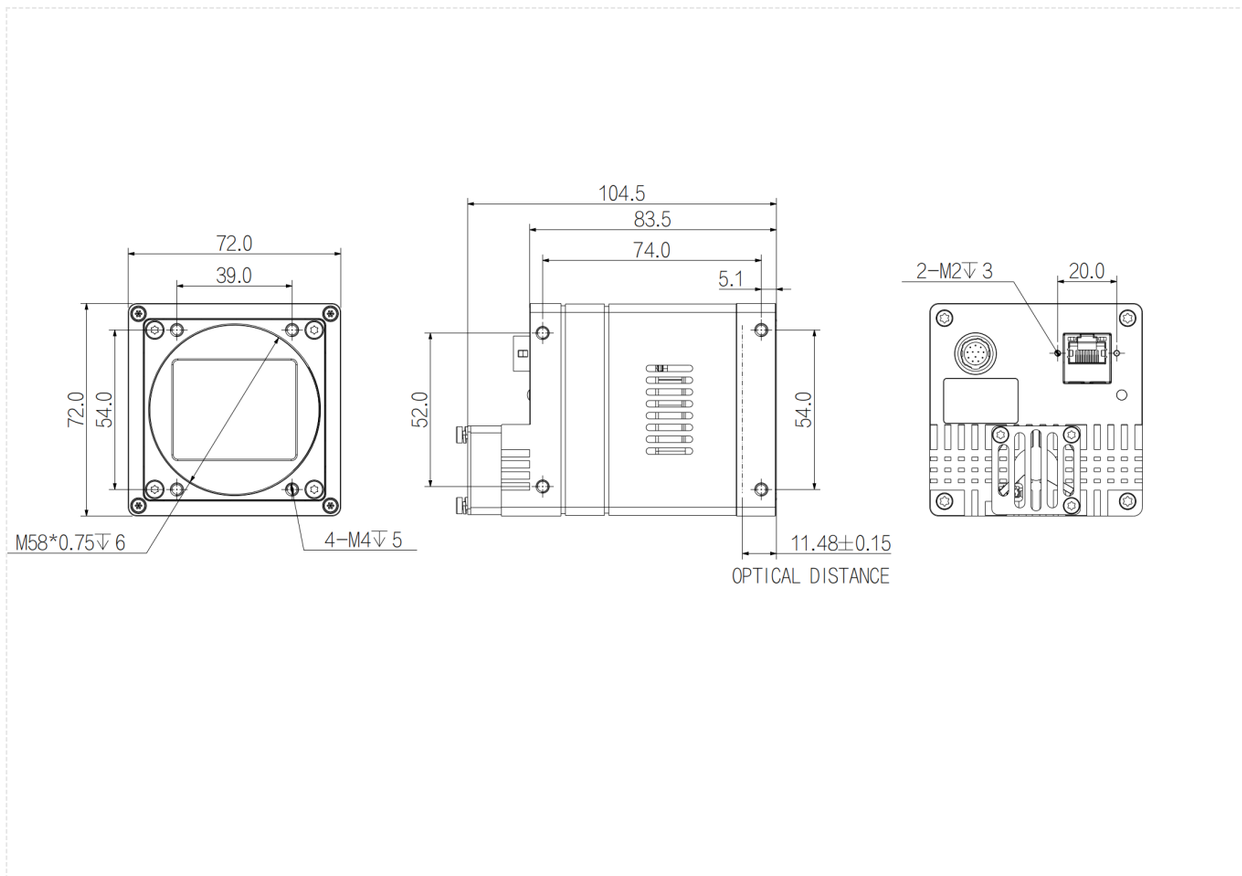

Specification

Model		AX5K37MT250E
Basic	Sensor	GMAX32103
	Image Sensor	36.1 mm × 29.4 mm CMOS
	Shutter	Global
	Resolution	11264 × 9200
	Frame Rate	11.25 fps
	Bit Depth	12
	Mono/Color	Mono
	Pixel Size	3.2 μm × 3.2 μm
Image	Pixel	103 MP
	S/N Ratio	> 40 dB
	Dynamic Range	66.4 dB
	Image Format	Mono8/10/10Packed/12/12Packed
	Binning	Support
	ROI	Support
	X Flip	Support
	Y Flip	Support
	Gain	1 ~ 32
	Gamma	From 0 to 4, support LUT
	Exposure Time	20 μs ~ 15 s
	Trigger Mode	Software Trigger/Hardware Trigger/Free Run Mode
	SPC	Support
Performance	User Setting	Support two sets of user-defined configurations
	Image Buffer	1GB
Port	Port	10GigE
	GPIO Interface	3 × Opto-isolated input, 3 × Opto-isolated output, 1 × RS232
	Lens Mount	M58 × 0.75
Power	Power Supply	24 V
	Power Consumption	20 W
Structure	Product Dimensions	72 mm × 72 mm × 79 mm (not including rear case connector)
	Net Weight	600 g
Environment	Storage Temperature	-30℃~+80℃
	Operating Temperature	0℃~+50℃

Connector Pin-out

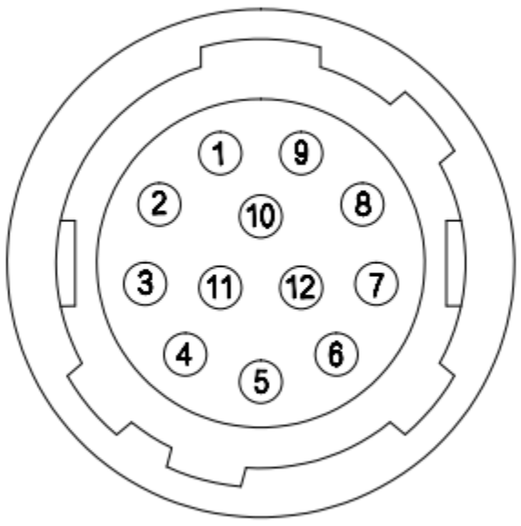

Pin	Signal	Description
1	GND	Power and signal GND
2	Power	Power supply
3	RXD RS232	Serial receive
4	TXD RS232	Serial send
5	Line3	Opto-isolated input
6	Line4	Opto-isolated input
7	Line5	Opto-isolated input
8	OPT_IN_GND	Opto-isolated input GND
9	Line0	Opto-isolated output
10	Line1	Opto-isolated output
11	Line2	Opto-isolated output
12	OPT_OUT_GND	Opto-isolated output GND
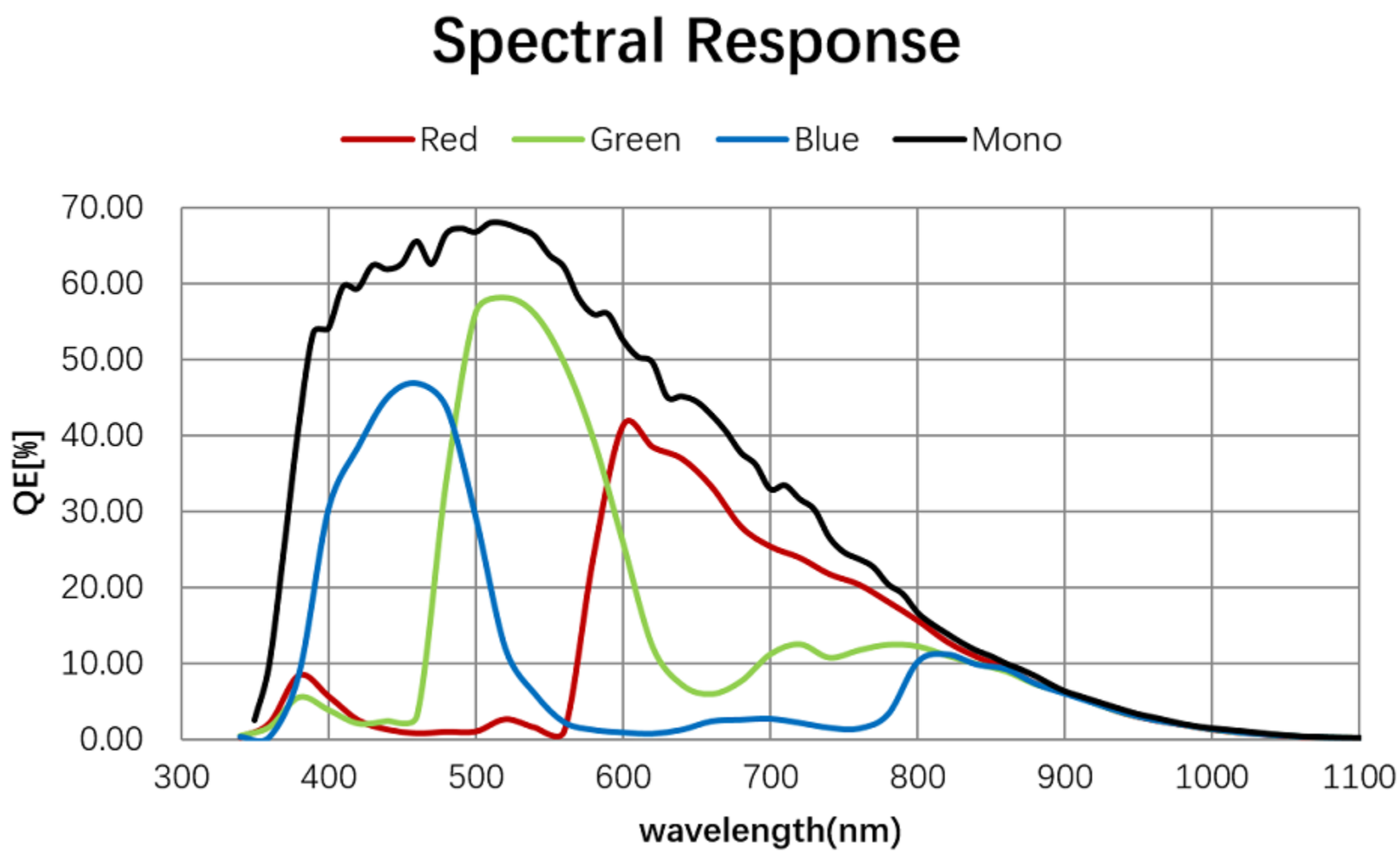
Spectrogram