# Large Area Scan Series

## AX5A22MP050E

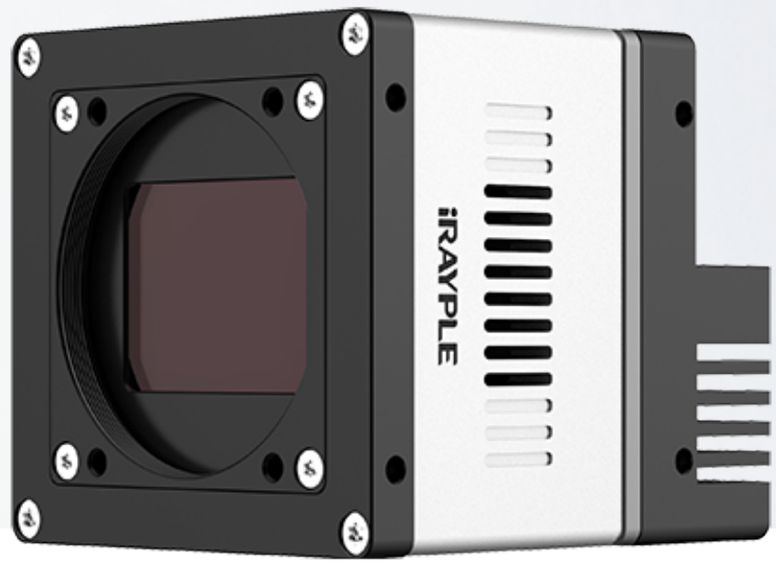


## Features

- CXP-12 interface, 4 x 12.5Gbps theoretical transfer bandwidth;
- Support hardware trigger/free run mode;
- Support pixel-by-pixel FFC function;
- Support multiple image data formats output, ROI and etc. ;
- Support PoCXP and DC 24V power supply;
- Conforms to CoaXPress protocol and GenICam standard;
- Conform to CE, KC and RoHS;

## Dimensions (mm)

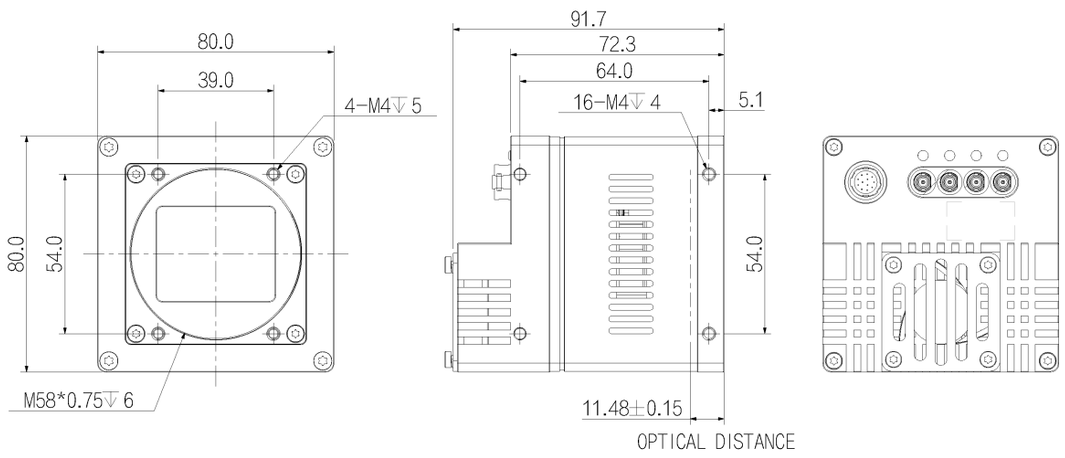

## Specification

| Model | | AX5A22MP050E |
|---|---|---|
| Basic | Sensor | CMV12000 |
| | Image Sensor | 22.5 mm x 16.9 mm CMOS |
| | Shutter | Global |
| | Resolution | 4096 × 3072 |
| | Frame Rate | 330 fps |
| | Bit Depth | 12 bit |
| | Mono/Color | Mono |
| | Pixel Size | 5.5 μm × 5.5 μm |
| Image | Pixel | 12 MP |
| | S/N Ratio | 41.3 dB |
| | Dynamic Range | 60 dB |
| | Image Format | Mono8/10/12 |
| | ROI | Support |
| | X Flip | Support |
| | Y Flip | Support |
| | Gain | Analog gain: 1x ~ 4x, Digital gain: 1x ~ 100x |
| | Exposure Time | 50 μs ~ 5 s |
| | Trigger Mode | Software Trigger/Hardware Trigger/Free Run Mode |
| | SPC | Support |
| Performance | User Setting | Support two sets of user-defined configurations |
| Port | Port | CXP-12 |
| | GPIO Interface | 3x Opto-isolated input, 3x Opto-isolated output;1x RS232 |
| | Lens Mount | M58 x 0.75 |
| Power | Power Supply | DC 24V power supply via 12 Hirose interface，support PoCXP |
| | Power Consumption | 24 V ≈ 24 W |
| Structure | Product Dimensions | 80 mm x 80 mm x 72.3 mm (Non including rear case connector) |
| | Net Weight | 790 g |
| Environment | Storage Temperature | -30℃~+80℃ |
| | Operating Temperature | -30℃~+50℃ |

## Connector Pin-out

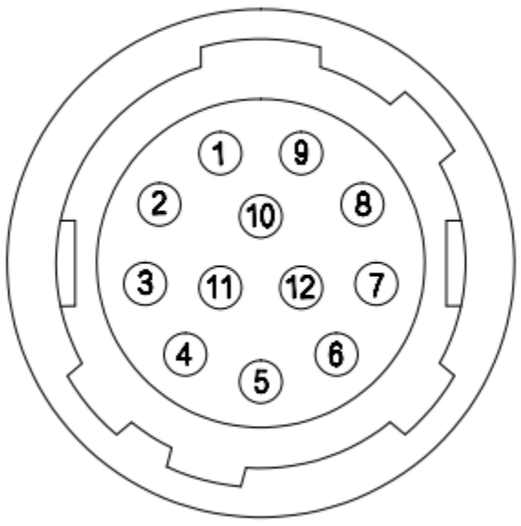


| Pin | Signal | Description |
|---|---|---|
| 1 | GND | Power and signal GND |
| 2 | Power | Power supply |
| 3 | RXD RS232 | Serial receive |
| 4 | TXD RS232 | Serial send |
| 5 | Line3 | Opto-isolated input |
| 6 | Line4 | Opto-isolated input |
| 7 | Line5 | Opto-isolated input |
| 8 | OPT_IN_GND | Opto-isolated input GND |
| 9 | Line0 | Opto-isolated output |
| 10 | Line1 | Opto-isolated output |
| 11 | Line2 | Opto-isolated output |
| 12 | OPT_OUT_GND | Opto-isolated output GND |
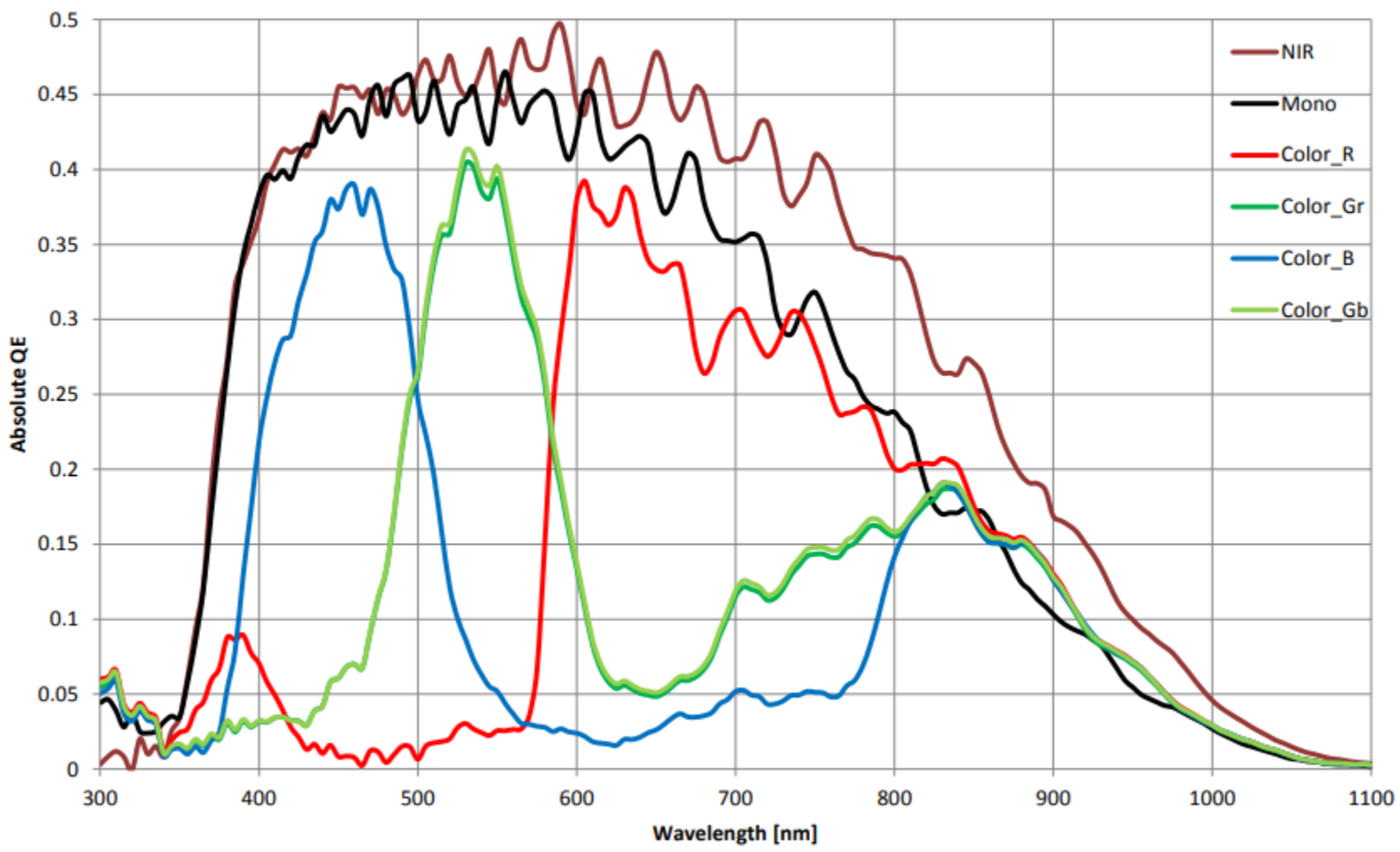
## Spectrogram