Large Area Scan Series

AX5A22CP050E

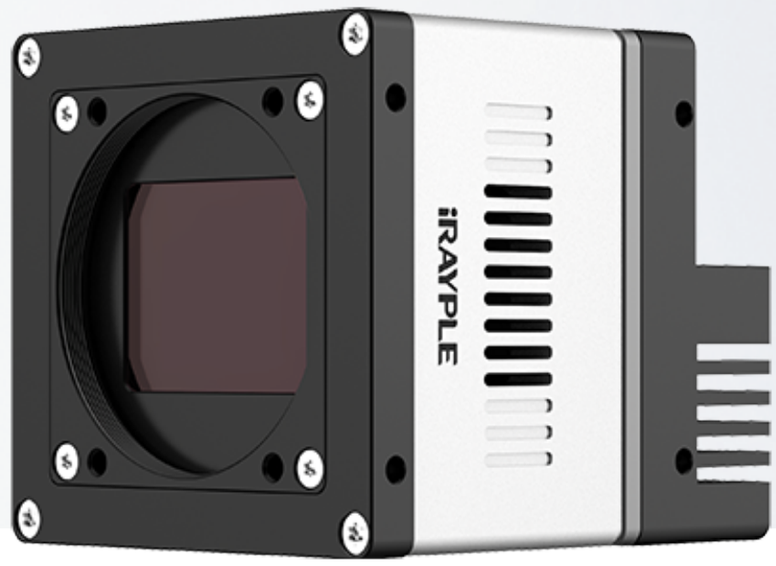

Features

- CXP-12 interface, 4 x 12.5Gbps theoretical transfer bandwidth;
- Support hardware trigger/free run mode;
- Support pixel-by-pixel FFC function;
- Support multiple image data formats output, ROI and etc. ;
- Support PoCXP and DC 24V power supply;
- Conforms to CoaXPress protocol and GenICam standard;
- Conform to CE, KC and RoHS;

Dimensions (mm)

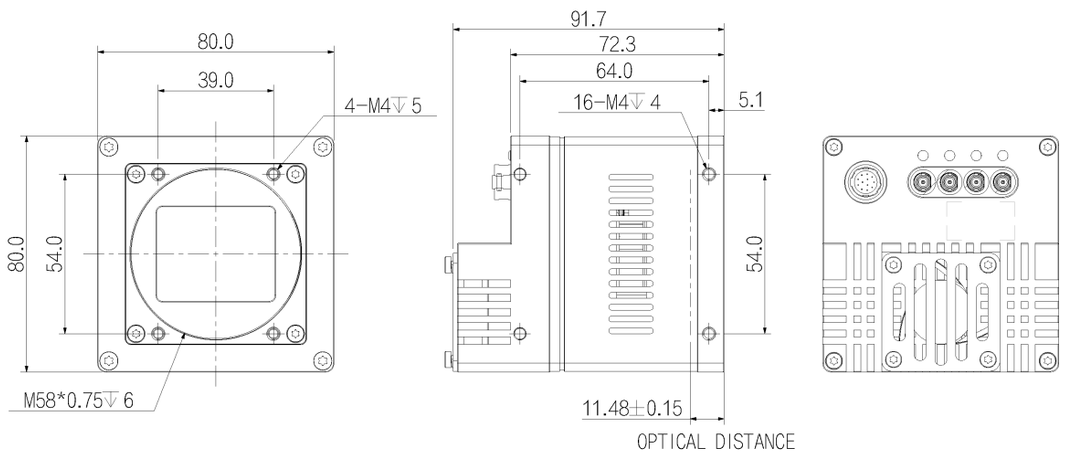

Specification

Model		AX5A22CP050E
Basic	Sensor	CMV12000
	Image Sensor	22.5 mm x 16.9 mm CMOS
	Shutter	Global
	Resolution	4096 × 3072
	Frame Rate	330 fps
	Bit Depth	12 bit
	Mono/Color	Color
	Pixel Size	5.5 μm × 5.5 μm
Image	Pixel	12 MP
	S/N Ratio	41.3 dB
	Dynamic Range	60 dB
	Image Format	BayerGR8/10/12, BayerRG8/10/12, BayerGB8/10/12, BayerBG8/10/12
	ROI	Support
	X Flip	Support
	Y Flip	Support
	Gain	Analog gain: 1x ~ 4x, Digital gain: 1x ~ 100x
	Exposure Time	50 μs ~ 5 s
	Trigger Mode	Software Trigger/Hardware Trigger/Free Run Mode
	SPC	Support
Performance	User Setting	Support two sets of user-defined configurations
Port	Port	CXP-12
	GPIO Interface	3x Opto-isolated input, 3x Opto-isolated output, 1x RS232
	Lens Mount	M58 x 0.75
Power	Power Supply	DC 24V power supply via 12 Hirose interface，support PoCXP
	Power Consumption	24 V ≈ 24 W
Structure	Product Dimensions	80 mm x 80 mm x 72.3 mm (Non including rear case connector)
	Net Weight	790 g
Environment	Storage Temperature	-30℃ ~ 80℃
	Operating Temperature	-30℃ ~ 50℃

Connector Pin-out

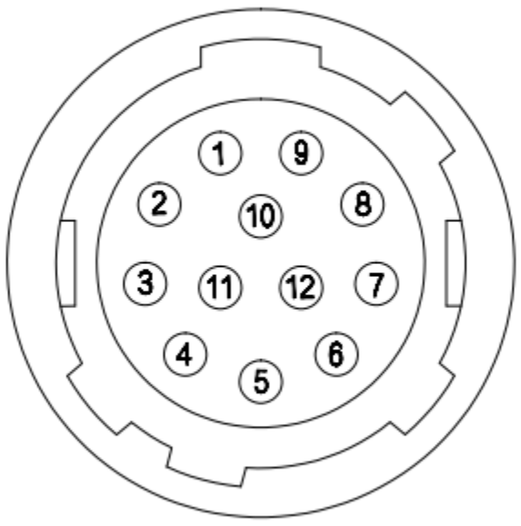

Pin	Signal	Description
1	GND	Power and signal GND
2	Power	Power supply
3	RXD RS232	Serial receive
4	TXD RS232	Serial send
5	Line3	Opto-isolated input
6	Line4	Opto-isolated input
7	Line5	Opto-isolated input
8	OPT_IN_GND	Opto-isolated input GND
9	Line0	Opto-isolated output
10	Line1	Opto-isolated output
11	Line2	Opto-isolated output
12	OPT_OUT_GND	Opto-isolated output GND
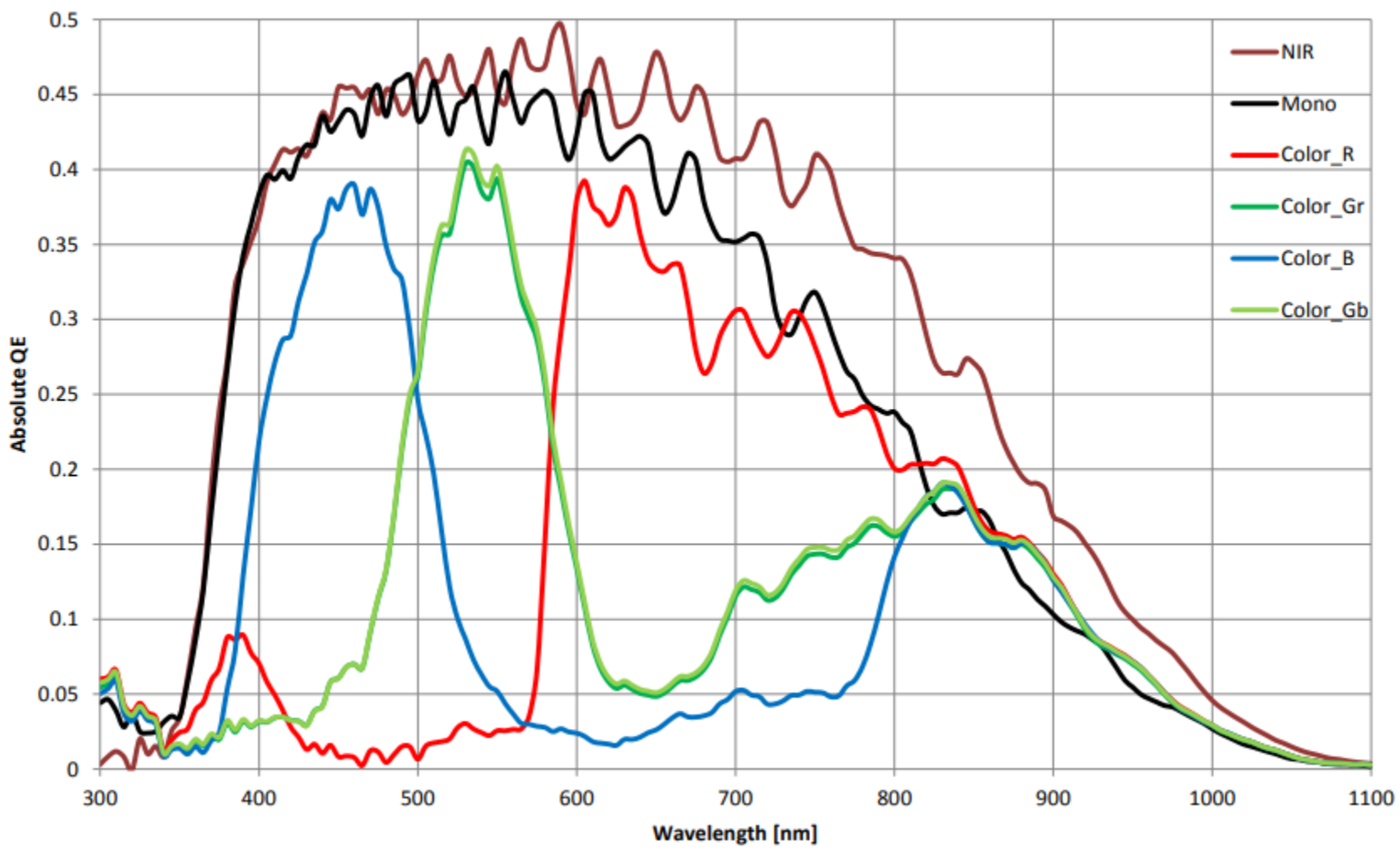
Spectrogram