Large Area Scan Series

A9507MX703E

Features

- CXP-6 interface, 2 x 6.25Gbps theoretical transfer bandwidth;
- Support hardware trigger/free run mode;
- Support FFC (block) function;
- Support multiple image data formats output, ROI and etc. ;
- Support PoCXP and DC 24V power supply;
- Conforms to CoaXPress protocol and GenICam standard;
- Conform to CE, KC and RoHS;

Dimensions (mm)

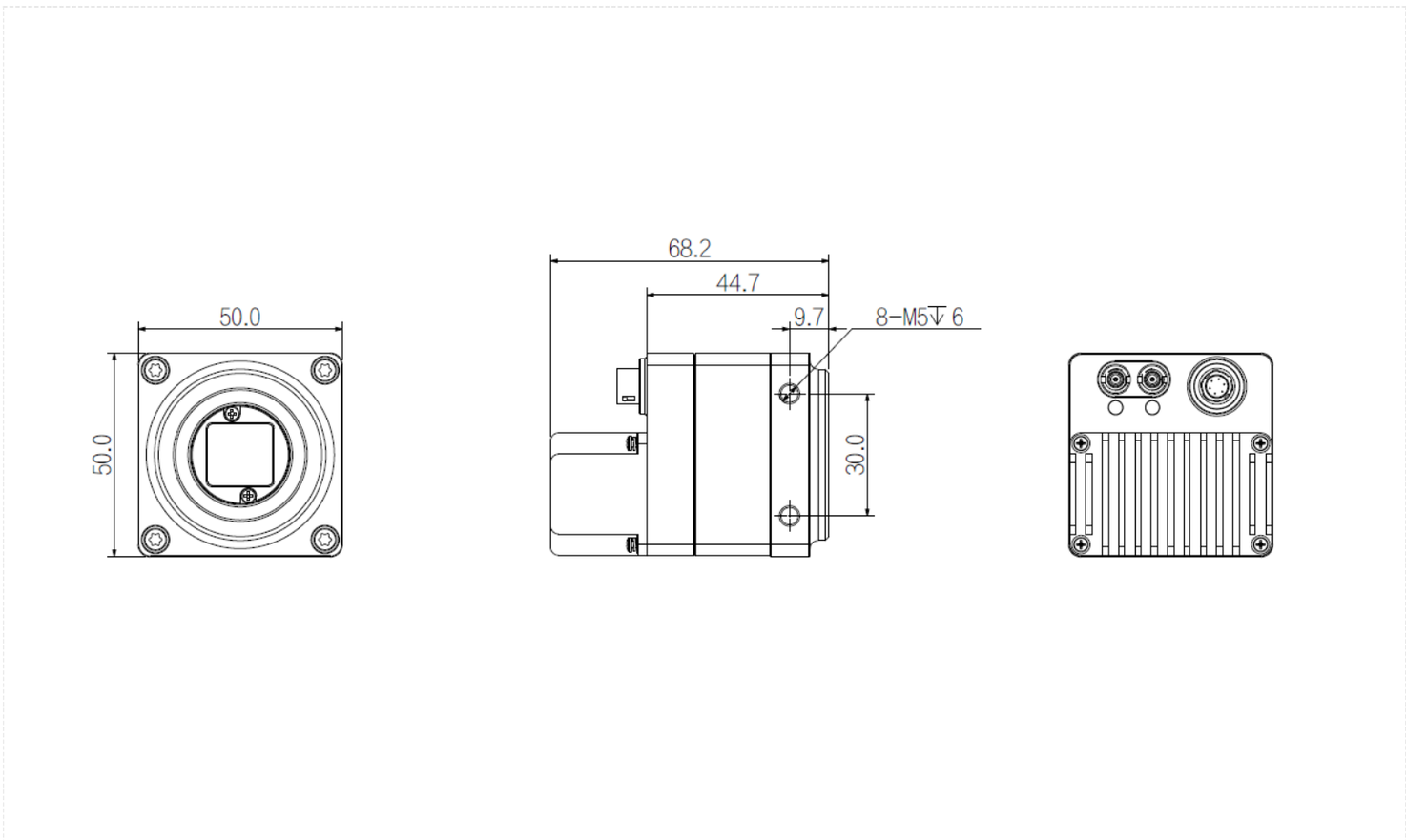

Specification

Model		A9507MX703E
Basic	Sensor	GMAX2505
	Image Sensor	6.5 mm × 5.4 mm CMOS
	Shutter	Global
	Resolution	2592 × 2160
	Frame Rate	210 fps
	Bit Depth	12 bit
	Mono/Color	Mono
	Pixel Size	2.5 μm × 2.5 μm
Image	Pixel	5 MP
	S/N Ratio	36 dB
	Dynamic Range	62 dB
	Image Format	Mono8/10/12
	ROI	Support
	X Flip	Support
	Y Flip	Support
	Gain	Analog gain: 1× ~ 2×, Digital gain: 1× ~ 100×
	Exposure Time	2 μs ~ 5 s
	Trigger Mode	Software Trigger/Hardware Trigger/Free Run Mode
	SPC	Support
Performance	User Setting	Support two sets of user-defined configurations
Port	Port	CXP-6
	GPIO Interface	1× Opto-isolated input, 1× Opto-isolated output, 1× configurable input and output
	Lens Mount	C-mount
Power	Power Supply	DC 24V power supply via 6 Hirose interface，support PoCXP
	Power Consumption	24 V ≈ 6.4 W
Structure	Product Dimensions	50 mm × 50 mm × 44.7 mm (Non including rear case connector)
	Net Weight	240 g
Environment	Storage Temperature	-30℃~+80℃
	Operating Temperature	-30℃~+40℃

Connector Pin-out

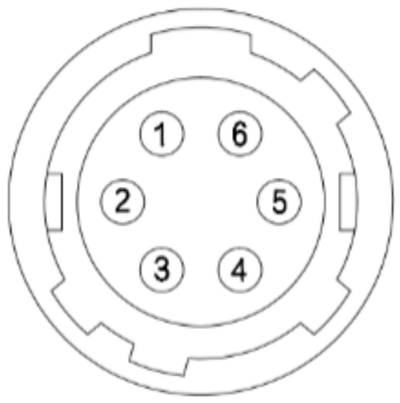

Pin	Description	Features
1	-	+10VDC to 24VDC power supply
2	LINE1	Opto-isolated input
3	LINE2	GPIO(I/O can be configured for non-isolated software)
4	LINE0	Opto-isolated output
5	-	Opto-isolated signal ground(ISO_GND)
6	-	Camera DC power ground and GPIO signal ground(GND)
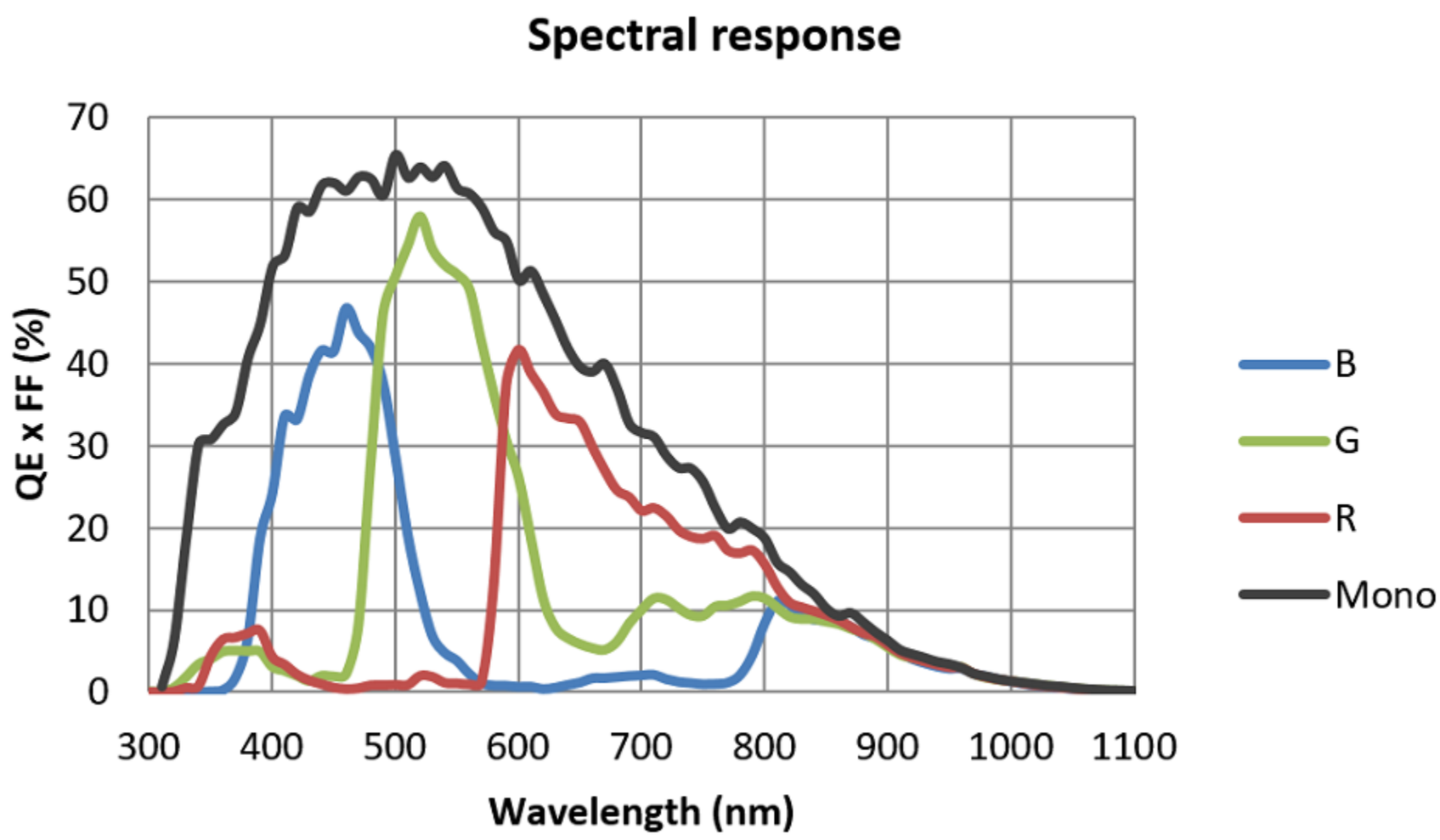
Spectrogram