AE Series

AE7230CG010E

Features

- Gigabit Ethernet interface, providing 1Gbps bandwidth with a maximum transmission distance of 100m;
- 256MB on-board cache for data transmission or image resend;
- Support Software Trigger/Hardware Trigger/Free Run Mode;
- Support ISP functions including Sharpness/Denoising/Gamma/LUT/BlackLevel Correction/TargetBrightness/Contrast etc.;
- Support multiple image data formats output/ROI/Binning/Mirror, etc.;
- Conform to GigE Vision V2.0 protocol and GenICam standard;
- Conform to CE, RoHS;

Dimensions (mm)

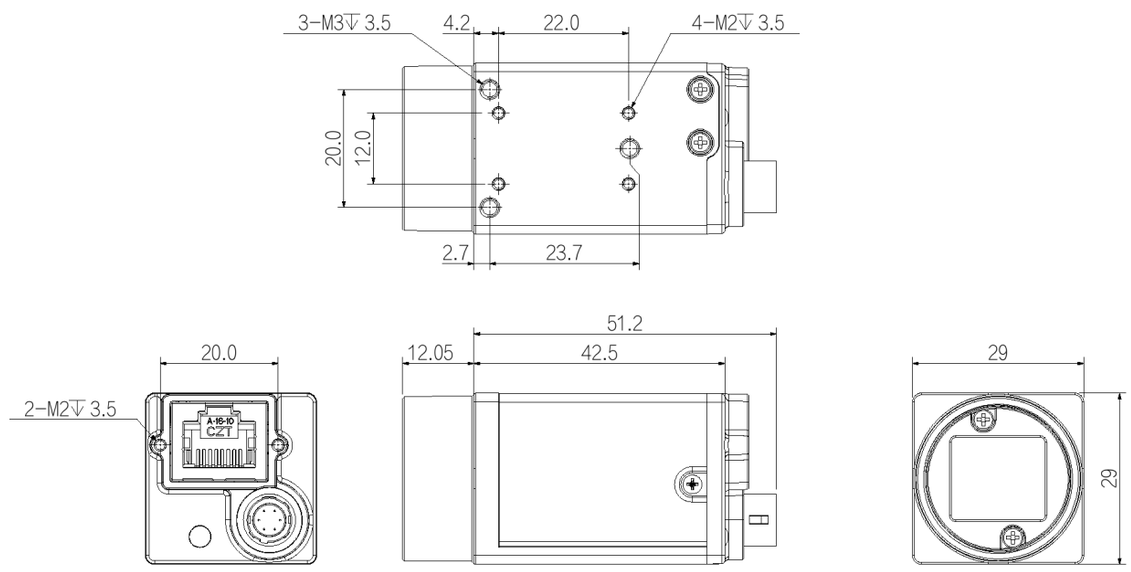

Specification

Model		AE7230CG010E
Basic	Sensor	IMX392
	Image Sensor	1/2.3"CMOS
	Shutter	Global
	Resolution	1920 × 1200
	Frame Rate	52 fps
	Bit Depth	10
	Mono/Color	Color
	Pixel Size	3.45 μm × 3.45 μm
Image	Pixel	2.3 MP
	S/N Ratio	38 dB
	Dynamic Range	60 dB
	Image Format	Mono8,BayerRG8/10/10Packed,YUV422_8_UYVY,YUV422_8
	Binning	Support
	ROI	Support
	X Flip	Support
	Y Flip	Support
	Gain	1 ~ 32
	Gamma	From 0 to 4, support LUT
	Exposure Time	16 μs ~ 1 s
	Trigger Mode	Software Trigger/Hardware Trigger/Free Run Mode
	SPC	Support
Performance	User Setting	Support two sets of user-defined configurations
	Image Buffer	256MB
Port	Port	GigE, PoE
	GPIO Interface	1× 6 pin Hirose: 1× Opto-isolated input, 1× Opto-isolated output, 1 configurable input and output
	Lens Mount	C-mount
Power	Power Supply	PoE/ DC 9V~24V power supply via Hirose interface
	Power Consumption	12 V≈2.86 W
Structure	Product Dimensions	29 mm×29 mm×42 mm (not including lens mount and rear case connector)
	Net Weight	98 g
Environment	Storage Temperature	-30℃~+80℃
	Operating Temperature	0℃~+50℃

Connector Pin-out

Definitions of camera 6-pin ports:

Pin	Description	Features
1	-	+9VDC to 24VDC power supply
2	Line1	Opto-isolated input
3	Line2	GPIO (I/O can be configured for non-isolated software)[1]
4	Line0	Opto-isolated output
5	-	Opto-isolated signal ground (ISO_GND)
6	-	Camera DC power ground and GPIO signal ground (GND)

Definition of 6-pin power port

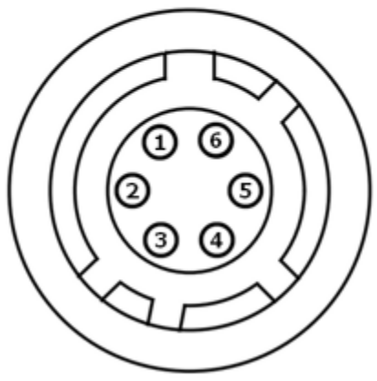
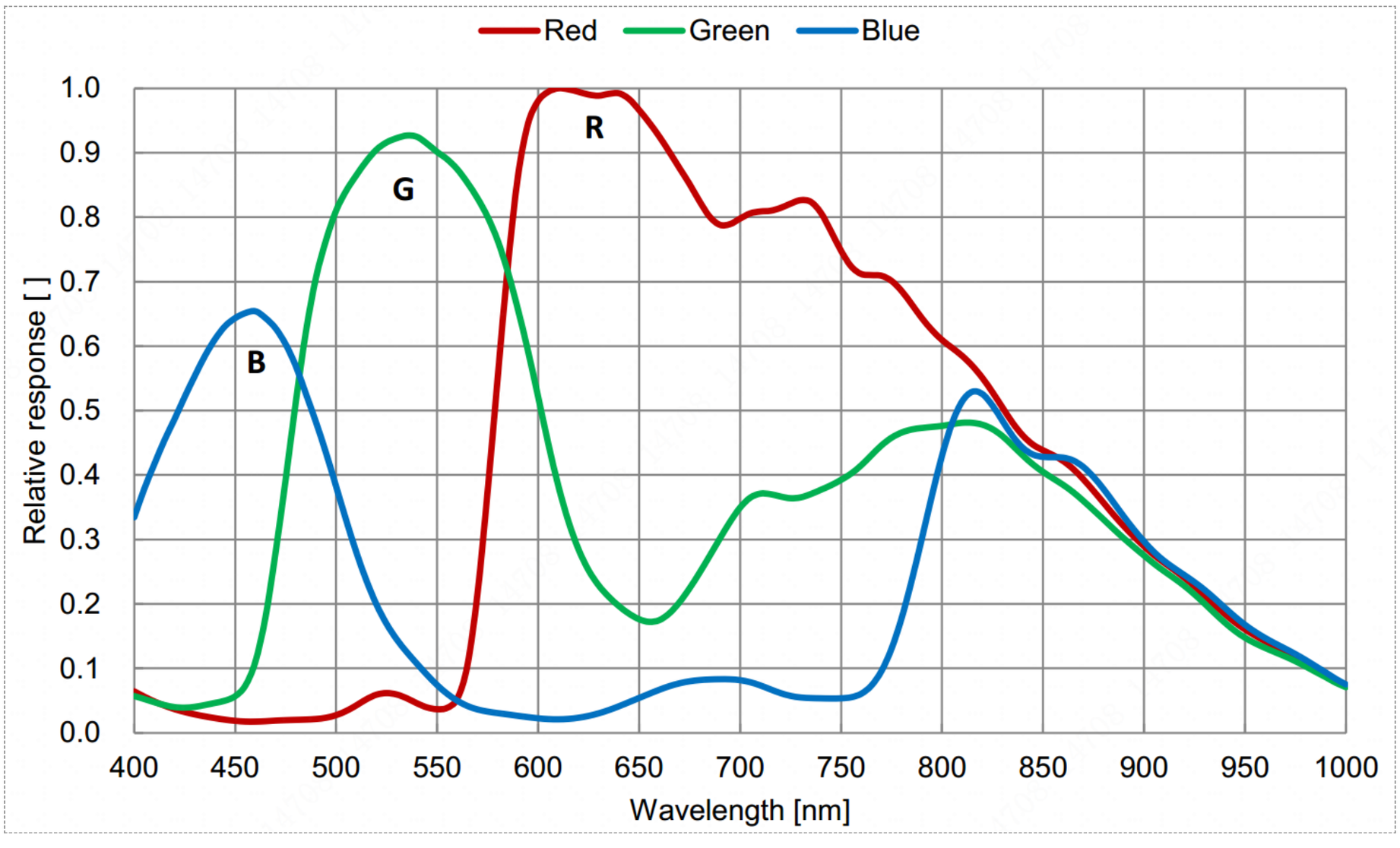
Spectrogram