SS3000 Series

SS3016PMG-07H-RGF01E

Features

- Ultra-compact body design, can adapt to a variety of narrow installation space, and perfect integration with the machine equipment;
- Flexible and convenient manual focusing mode, which can cope with various close-range application scenarios;
- 100m industrial Ethernet interface, IP65 protection grade;
- Cross-platform Web access, guided configuration process, more convenient equipment debugging;
- Rich IO interface, Ethernet, RS232, GPIO interface, supporting multiple communication protocols;
- Built-in various easy-to-use operator tools can quickly realize various detection such as presence/absence, positive/negative, measurement, identification, etc.

Dimensions (mm)

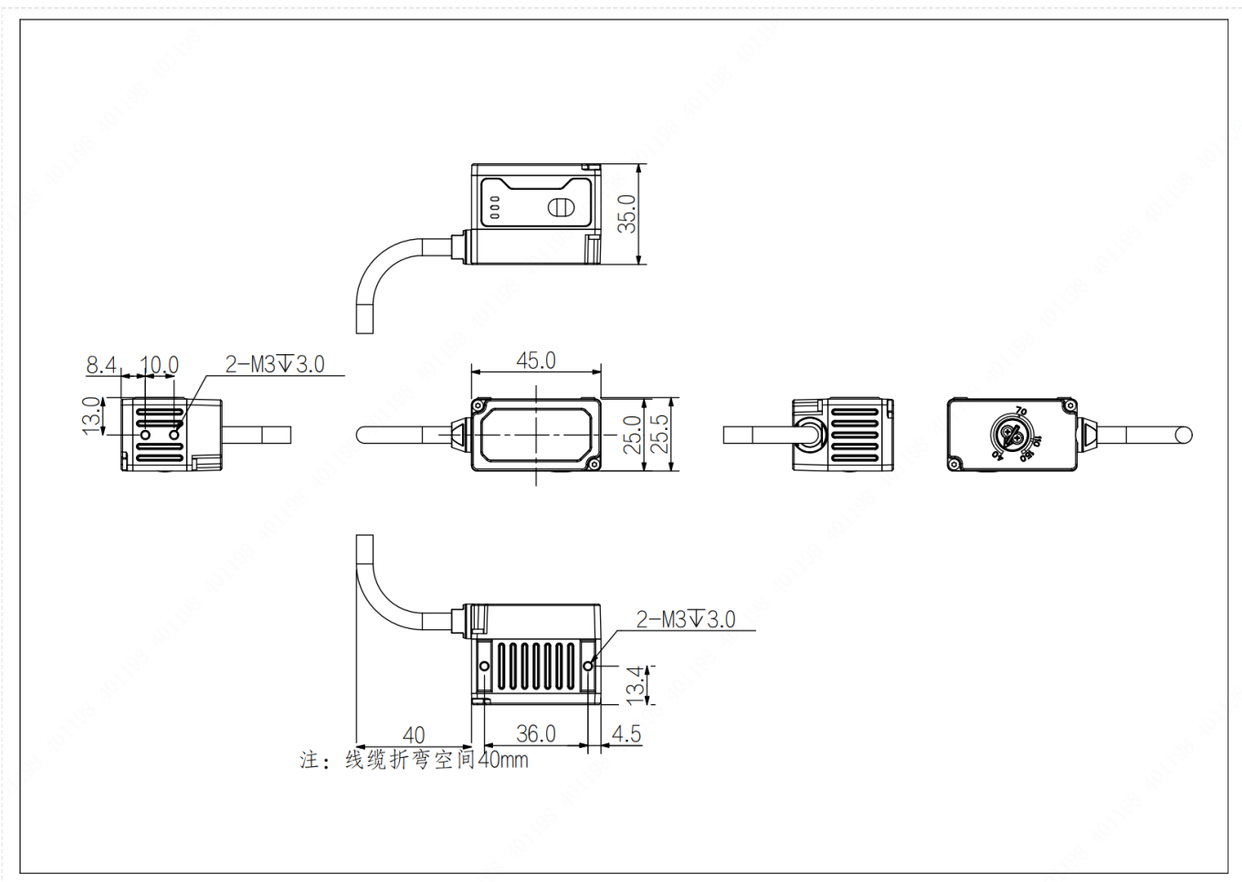

Specification

Model		SS3016PMG-07H-RGF01E
Basic	Resolution	1440×1080
	Max. Frame rate	60fps
	Shutter Mode	Global
	Mono/Color	Mono
	Trigger Mode	Internal Trigger/External Trigger/Ethernet/Serial/Industrial Ethernet.
	Software	EasyVS, Web
	Certifications	CE, KC, UKCA, UL
	Function	Location Tools: PatternMatch AI Tools: AI classification Exist Tools: FindLine、FindCircle、 BlobExist Count Tools: BlobCount Measure Tools: Grayscale area 、Contrast、Brightness、EdgeWidthTool Detection Tools: ContourCompare Recognition Tools: DataCode、BarCode、OCR Logic Tools: LogicCheck、ConditionCheck、Mathematical、StringComparison
	Focal Length	7 mm
	Focus Control	Manual control
	Light Source Type	Red polarization
Performance	Working Distance	40 mm - 150 mm
	Field of View (FOV)	30 mm × 22 mm - 111 mm × 83 mm
Port	Connector	Industrial-grade M12 connectors are Ethernet and GPIO interfaces
	Network Port	100M Ethernet
	GPIO Interface	1x RS232 interface, 1x Opto-isolated input, 1x Opto-isolated output, 1 configurable input and output
	Communication Mode	RS232, Ethernet
	Communication protocol	TCP Client, TCP Server, UDP, FTP, RS232, Profinet、Modbus TCP、EtherNet/IP
	LED Indicator	Power indicator, Network indicator, Result indicator
Power	Power Supply	Support 9~26VDC, 1A input, suitable for industrial environment
	Power Consumption	<8.8W
Structure	Product Dimensions	45.0mm × 35.0mm × 25.5mm(Without cable)
	Net Weight	＜110 g
	Protection	IP65
	Casing Material	Aluminum alloy + Front cover
Environment	Operating Temperature	-20℃～+50℃
	Operating Humidity	20%～95%, Non condensing
	Storage Temperature	-30℃～+70℃

Connector Pin-out

12 pin-out on camera:

Pin	Signal	Description	Cable Color	
1	Power	Power		Red
2	POWER_GND	Power GND		Black
3	OPT_OUT0	Opto-isolated output		Brown
4	OPT_GND	Opto-isolated GND		Purple white
5	OPT_IN0	Opto-isolated input		Yellow
6	GPIO	Configurable IO		Blue
7	MD1_P	RJ45 port		Green
8	MD1_N	RJ45 port		Green white
9	MD0_P	RJ45 port		Orange
10	MD0_N	RJ45 port		Orange white
11	RS232_RXD	Received data		Purple
12	RS232_TXD	Transmit data		Grey
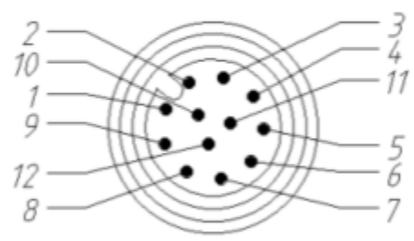
12-pin assignment on camera