AGV Code Reader

R3138MG010E

Features

- High performance decode algorithm, can be applied when DM code is under condition of dirty/defect/low contrast during operation.
- Embedded decode algorithm. High speed/accuracy.
- Support DM-12&DM-14 and DM code array.
- Embedded aviation plug, abundant IO interfaces.
- 5-way indicator for debug and camera status monitoring.
- Support multiple UserSet parameter save/load/switch.
- Apply M12 FA lens, supports locating DM code in large FOV.

Dimensions (mm)

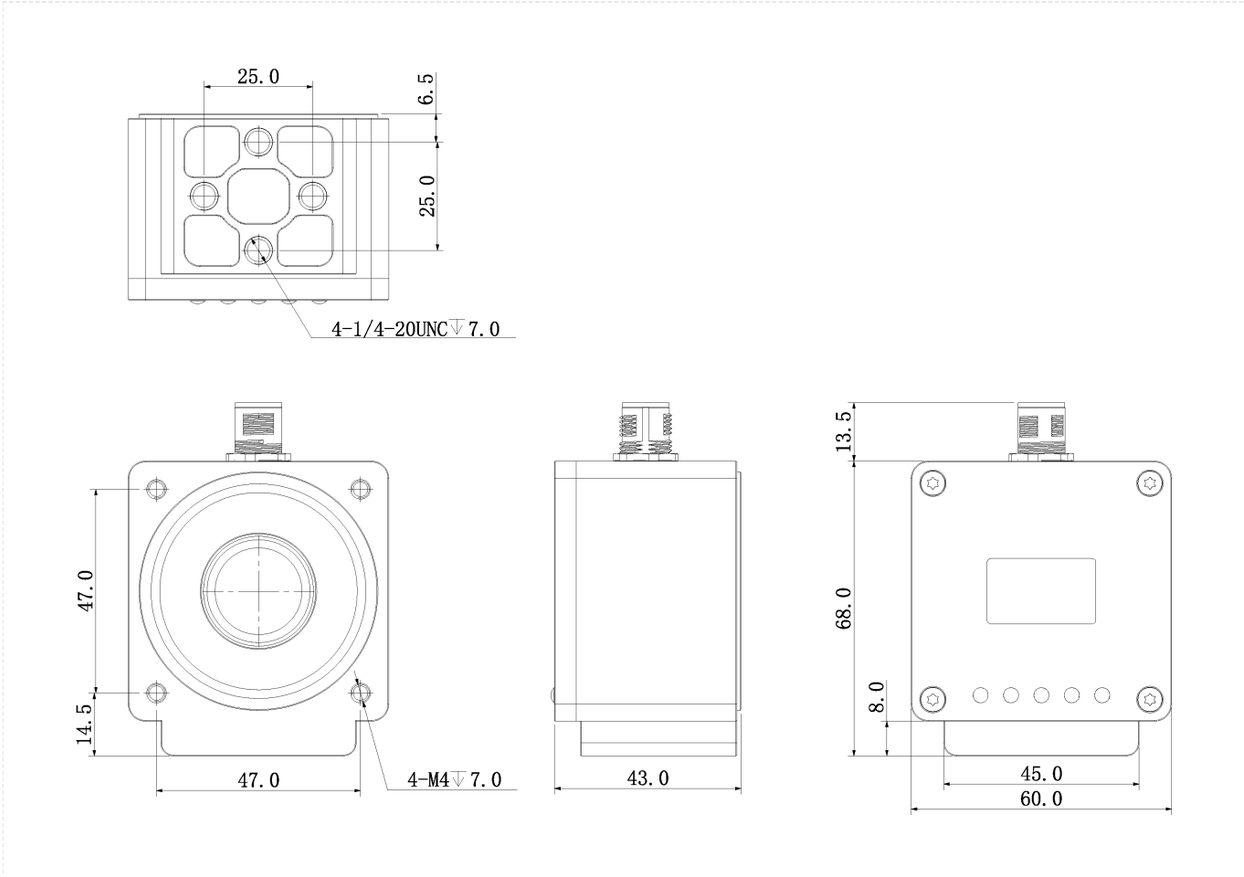

Specification

Model		R3138MG010E
Basic	Max. Frame rate	120 fps
	Shutter Mode	Global
	Mono/Color	Mono
	Lens Mount	M12
	Trigger Mode	Single Frame trigger/Software trigger/Free run mode
	Software	SVStudio
	Certifications	CE，FCC，KC
	Function	DM-12&DM-14，DM4x4
Performance	Focal Length	3.37 mm
	Working Distance	100 mm
	Field of View (FOV)	110 mm × 93 mm
	Max. Read Speed	125 code/s
	Max. Operating Speed	3 m/s
	Focus Control	Stationarytype
	Light Source Type	WhiteLed
	Depth of Field (DoF)	±20mm
	Angular Accuracy	0.1°
	Displacement Accuracy	0.1mm
Port	Connector	1eaM12connector
	Network Port	100M Ethernet
	GPIO Interface	1 opto-isolated input，1 opto-isolated output
	Communication Mode	100MEthernet、RS485
	Communication protocol	SDK，Serial，TCPServer，TCPClient
	LED Indicator	5LEDindicator，SYS、NET、Triggerand2user-definedLED
Power	Power Supply	DC24V±10%
	Power Consumption	Disableillumination:<3.5W@24VDC Enableillumination:<7.5w@24VDC
Structure	Product Dimensions	60mm×60mm×43mm(Excludedinterfaceport)
	Packaging Dimensions	164 mm × 122 mm × 91 mm
	Net Weight	<225 g
	Gross Weight	<350 g
	Protection	IP65
	Casing Material	aluminum alloy

Model		R3138MG010E
Environment	Operating Temperature	-20℃ ~ +50℃
	Operating Humidity	20% ~ 95% , No condensation
	Storage Temperature	-30℃ ~ +80℃

Connector Pin-out
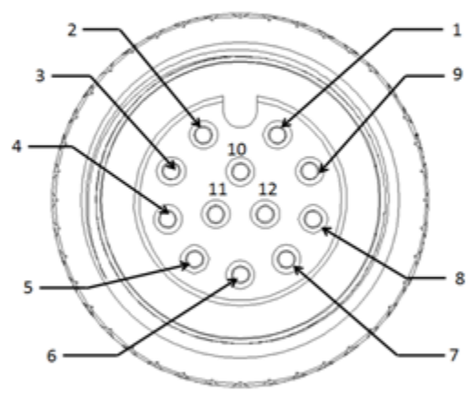
No.	Signal	Description
1	DC24V	VCC(+)
2	GND	GND
3	OPTO_OUT	Opto output
4	OUT_COM	Opto output GND
5	OPTO_IN	Opto input
6	IN_COM	Opto input GND
7	MDI1+	100Mbps signal MDI1+
8	MDI1-	100Mbps signal MDI1-
9	MDI0+	100Mbps signal MDI0+
10	MDI0-	100Mbps signal MDI0-
11	RS485+/CAN+	RS485 signal+ / CAN signal+
12	RS485-/CAN-	RS485 signal- / CAN signal-