R7000 Series

R7250MG-00C-NGG01E

Features

- CMOS series product, high-speed capture
- Built-in deep learning algorithm, efficient and powerful algorithms
- Support software trigger/ hardware trigger/ free run modes
- GigE, up to 1Gbps bandwidth
- Abundant I/O interfaces, RS232,3Opto-isolated input, 3Opto-isolated outputs
- Industrial M12 connector, IP67

Dimensions (mm)

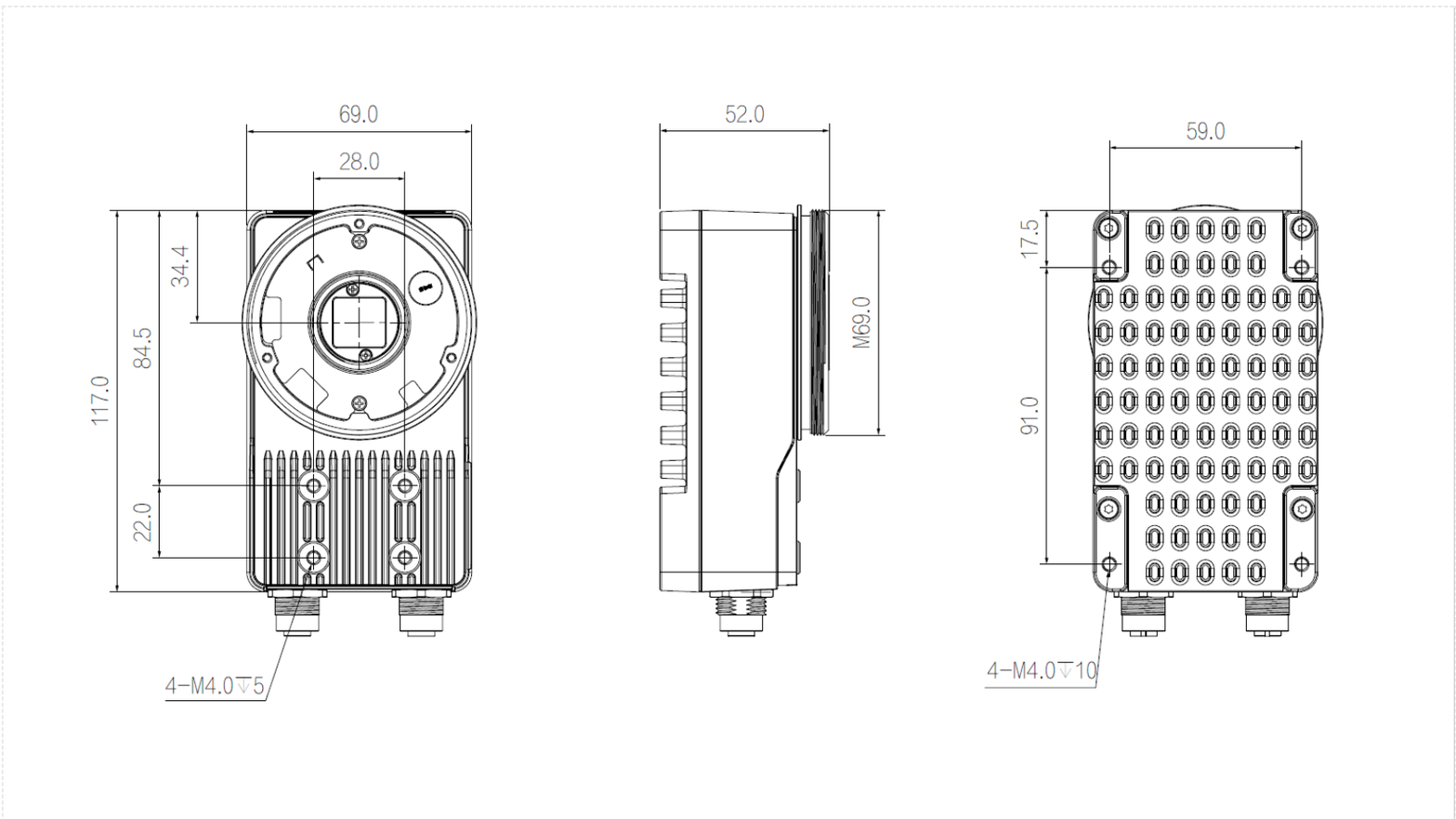

Specification

Model		R7250MG-00C-NGG01E
Basic	Resolution	5120 × 5104
	Max. Frame rate	12 fps
	Sensor Type	1.1" , CMOS
	Shutter Mode	Global
	Lens Mount	C-MOUNT
	Trigger Mode	Software trigger/External trigger/Free run modes
	Software	EasyID
	Certifications	CE，KC
	Function	lD: Code 39，Code 93，Code 128，CodaBar，EAN8，EAN13，UPCA，UPCE，ITF25，2of5（Industrial 2of5），standard25，GS1-128 etc. and 2D: QR/DM/MQR/GS1 DM/GS1 QR; Quality Evaluation: 1S0/IEC 29158(AIM-DPM), 1S0/IEC 15415, 1S0/IEC 15416
Performance	Max. Read Speed	90 codes/s
Port	Connector	2 Industrial connectors support GigE and GPIO
	Network Port	Code-A,GigE
	GPIO Interface	12Pins GPIO，RS232, 2 Opto-isolated inputs and 3 Opto-isolated outputs
	Communication Mode	RS232, Ethernet
	Communication protocol	SDK，TCP Client，FTP，TCP Server，RS232，Profinet、Modbus、EtherNet/IP、MCUdp、MCTcp、FinsUDP、FinsTCP、MELSEC
	LED Indicator	Power,Ethernet,Trigger
Power	Power Supply	24VDC, 1A input, suitable for industrial environment
	Power Consumption	<8.0W@DC24V (light not included)
Structure	Product Dimensions	117 mm × 69 mm × 43 mm(lens mount & connector not included)
	Net Weight	＜550 g
	Protection	IP67 (with lens cover)
	Casing Material	Aluminum alloy
Environment	Operating Temperature	-20℃～+50℃
	Operating Humidity	20%～95%, no condensation
	Storage Temperature	-30℃～+70℃

Connector Pin-out

12 pin-out on camera:

Pin	Signal	Description	Cable Color	
1	OPT_IN1	Opto-isolated input1		Yellow
2	OPT_IN2	Opto-isolated input2		Yellow white
3	OPT_OUT1	Opto-isolated output1		Brown
4	OPT_OUT2	Opto-isolated output2		Brown white
5	COM_RXD	RS232 serial receive		Purple
6	OPT_IN_GND	Opto-isolated input GND		Purple white
7	POWER	Power		Red
8	POWER_GND	Power GND		Black
9	OPT_OUT_GND	Opto-isolated output GND		Green
10	OPT_IN0	Opto-isolated input0		Orange
11	OPT_OUT0	Opto-isolated output0		Blue
12	COM_TXD	RS232 serial send		Grey
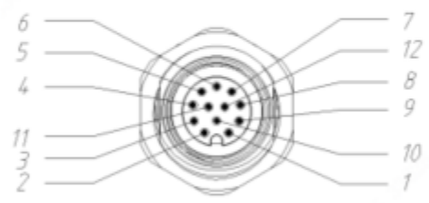
12-pin assignment on camera