R3000 Series

R3016PMG-07H-WGN01E

Features

- Built-in Whitelight, integrated design;
- Support multiple trigger modes such as software trigger/external trigger/free run;
- 100M Ethernet interface, IP65 protection level;
- Abundant IO interfaces such as Ethernet, RS232, GPIO, support multiple communication protocols;
- Support various code formats and evaluations of code quality;
- Built-in AI code reading algorithms and multi-parameters polling to ensure effects of complex applications.

Dimensions (mm)

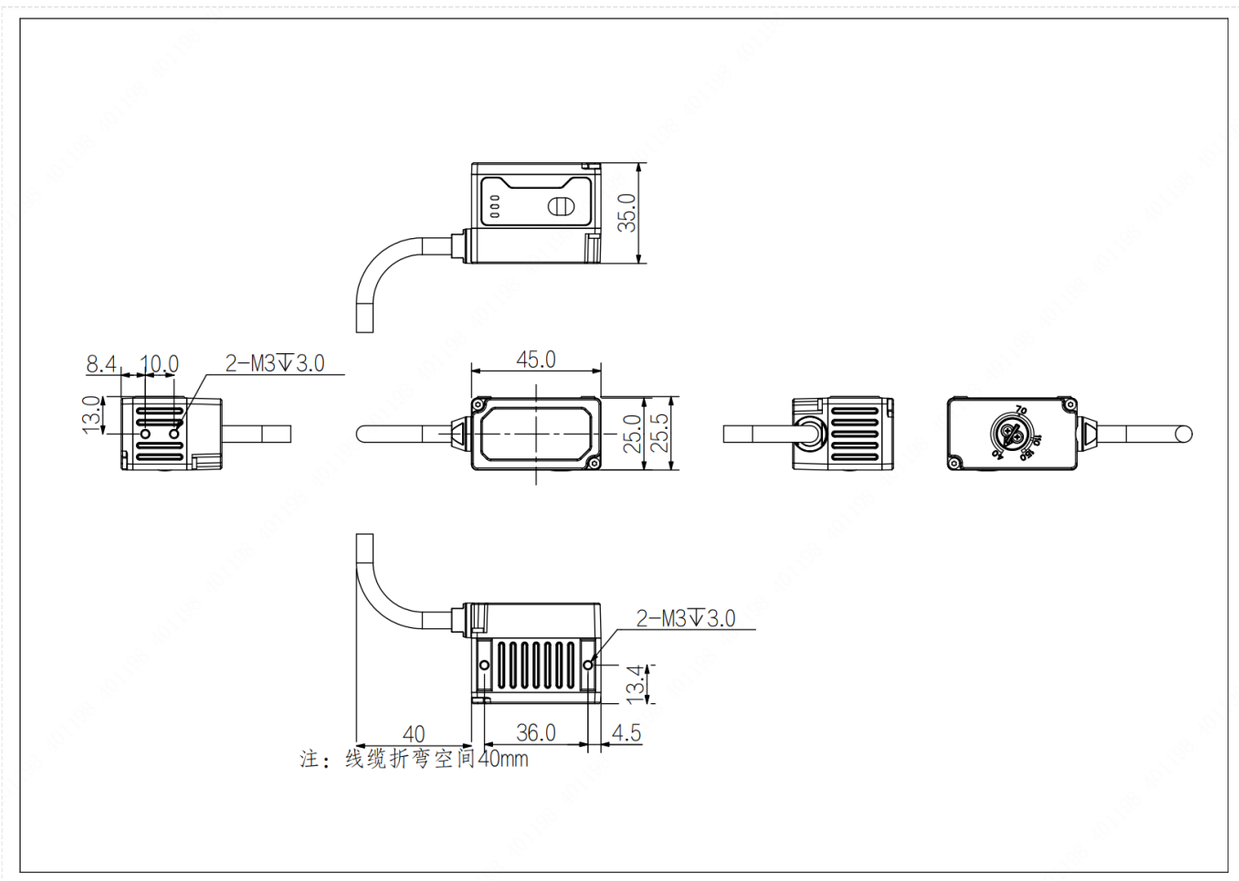

Specification

Model		R3016PMG-07H-WGN01E
Basic	Resolution	1440 × 1080
	Max. Frame rate	60 fps
	Shutter Mode	Global
	Mono/Color	Mono
	Trigger Mode	Support multiple trigger modes such as software trigger/external trigger/free run;
	Software	EasyID
	Certifications	CE, UKCA, KC
	Function	1D: Code 39/Code 93/Code128/CodaBar/EAN8/EAN13/UPCA/UPCE/ITF25/2of5（Industrial2of5）etc. and 2D:QR/Data Matrix/MQR/GS1 DM/GS1QR/PDF417/QRModel1/DMECC000-140 etc.; Quality Evaluation: ISO/IEC 29158(AIM-DPM), ISO/IEC 15415, ISO/IEC 15416）
	Focal Length	6.72 mm
	Focus Control	Manual control
	Light Source Type	White
Performance	Working Distance	40 - 150 mm
	Field of View (FOV)	30 × 22 mm - 111 × 83 mm
	Max. Read Speed	50 codes/s
	Max. Operating Speed	3 m/s
	Min. Resolution	1D code 0.05mm/ 2D code 0.08mm
	Sight	Orange/Green light indication
Port	Connector	Industrial-grade M12 connectors are Ethernet and GPIO interfaces
	Network Port	100M Ethernet
	GPIO Interface	1x RS232 interface, 1x Opto-isolated input, 1x Opto-isolated output, 1 configurable input and output
	Communication Mode	RS232, Ethernet
	Communication protocol	SDK，TCP Client，TCP Server，FTP，RS232，Profinet、Modbus、EtherNet/IP、MC（SLMP）、FINS/UDP、FINS/TCP
	LED Indicator	Power indicator, Network indicator, Result indicator
Power	Power Supply	Support 9~26VDC, 1A input, suitable for industrial environment
	Power Consumption	<10.5W
Structure	Product Dimensions	45.0mm × 35.0mm × 25.5mm(Without cable)
	Net Weight	<110 g
	Protection	IP65
	Casing Material	Aluminum alloy + Front cover
	Operating Temperature	-20℃ ~ +50℃

Environment	Operating Humidity	20%～95%, Non condensing
	Storage Temperature	-30℃～+70℃

Connector Pin-out

12 pin-out on camera:

Pin	Signal	Description	Cable Color	
1	Power	Power		Red
2	POWER_GND	Power GND		Black
3	OPT_OUT0	Opto-isolated output		Brown
4	OPT_GND	Opto-isolated GND		Purple white
5	OPT_IN0	Opto-isolated input		Yellow
6	GPIO	Configurable IO		Blue
7	MD1_P	RJ45 port		Green
8	MD1_N	RJ45 port		Green white
9	MD0_P	RJ45 port		Orange
10	MD0_N	RJ45 port		Orange white
11	RS232_RXD	Received data		Purple
12	RS232_TXD	Transmit data		Grey
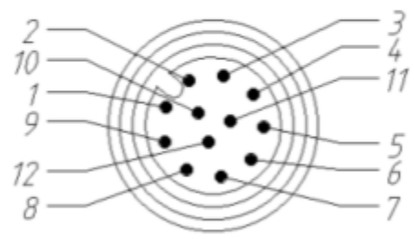
12-pin assignment on camera