A Pro Series

AH7500CU000E

Features

- USB3.0 interface, 5Gbps theoretical transfer bandwidth, power supply via USB interface ;
- Compact size of 29mmx29mmx30mm;
- 256MB on-board cache for data transmission or image resend;
- Support Software Trigger/Hardware Trigger/Free Run Mode;
- Support ISP functions including Gamma,LUT,BlackLevel ,Correction,TargetBrightness,Contrast,FFC,Denoising Sharpness,BalanceWhite,CCM,ColorAdjustment,Multi-color temperature adjustment, multi-function interpolation adjustment etc.;
- Support multiple image data formats output,ROI,Binning(Including Pixel arbitrary scaling),Mirror, AutoFunction,Sequencer (Gain、Exposure) etc.;
- Compatible with USB3.0 Vision protocol and GenICam standard;
- Conform to CE/UKCA/UL/KC,RoHS;

Dimensions (mm)

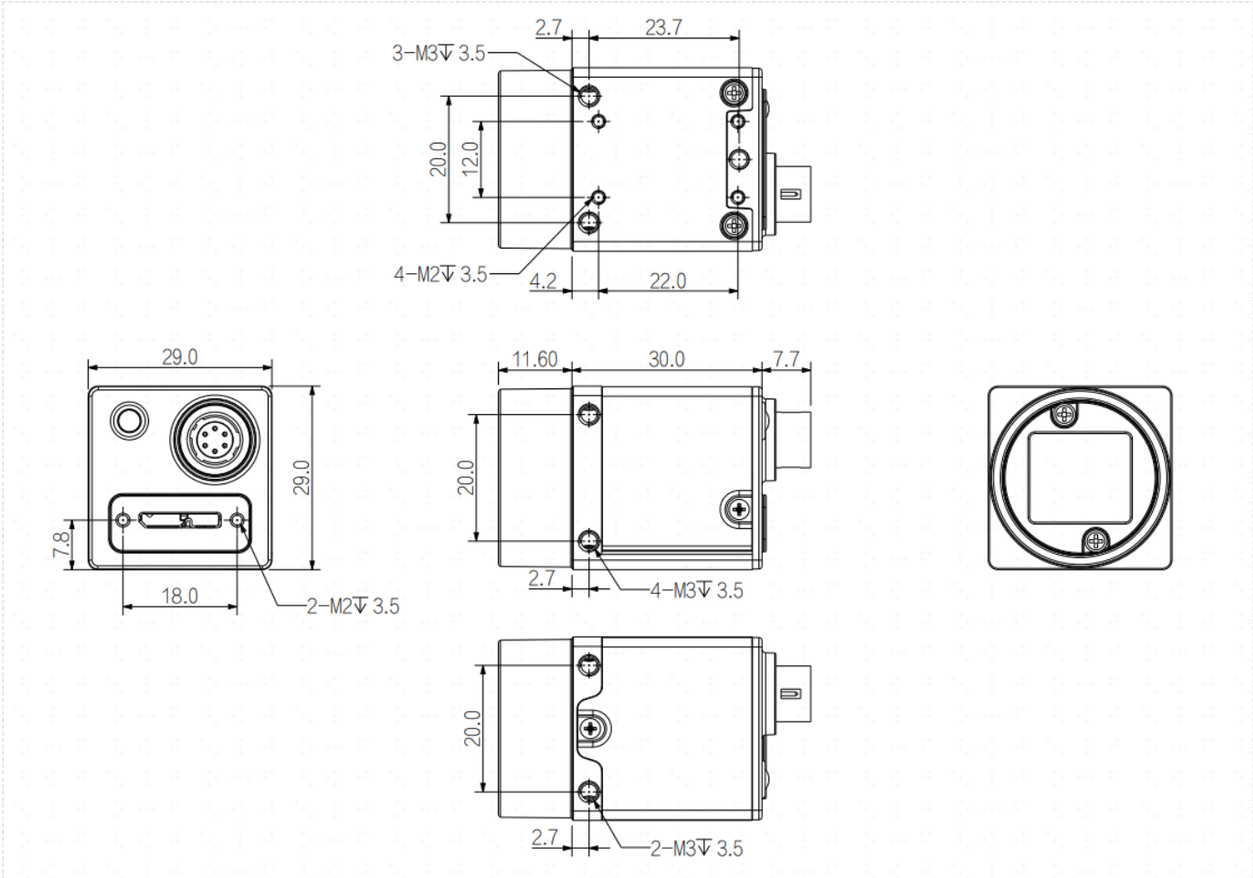

Specification

Model		AH7500CU000E
Basic	Sensor	IMX264
	Image Sensor	2/3"CMOS
	Shutter	Global
	Resolution	2448x2048
	Frame Rate	68.2 fps @2448x2048 Bayer RG 8
	Bit Depth	12
	Mono/Color	Color
	Pixel Size	3.45 μm × 3.45 μm
Image	Pixel	5.0 MP
	S/N Ratio	40 dB
	Dynamic Range	73 dB
	Image Format	Mono 8/10/12, Bayer RG 8/10/10Packed/12/12Packed,YUV422_8_UYVY,YUV422_8,RGB8,BGR8
	Binning	off/onebytwo/twobyone/twobytwo/onebyfour/fourbyone/twobyfour/fourbytwo/fourbyfour/ThreebyThree
	ROI	Support
	Gain	1～32X
	Gamma	From 0 to 3.99998, support LUT
	Exposure Time	SE: 1 μs ~ 14 μs UE: 15 μs ~ 10 sec
	Trigger Mode	Software Trigger/Hardware Trigger/Free Run Mode
	SPC	Support
Performance	User Setting	Support three sets of user-defined configurations
	Image Buffer	256MB
Port	Port	USB 3.0
	GPIO Interface	1× 6 pin Hirose: 1× Opto-isolated input, 1× Opto-isolated output, 1 configurable input and output
	Lens Mount	C-mount
Power	Power Supply	Power supply via USB connector /DC power supply by Hirose connector, with voltage range from 9V to 24V
	Power Consumption	≈3.2W(USB3.0 provide power supply)
Structure	Product Dimensions	29 mm×29 mm×30 mm (not including lens mount and rear case connector)
	Net Weight	Approx 85g
Environment	Storage Temperature	-30℃~+80℃
	Operating Temperature	-30℃~+50℃

Connector Pin-out

Definitions of camera 6-pin ports:

Pin	Description	Features
1	-	+9VDC to 24VDC power supply
2	Line1	Opto-isolated input
3	Line2	GPIO (I/O can be configured for non-isolated software)[1]
4	Line0	Opto-isolated output
5	-	Opto-isolated signal ground (ISO_GND)
6	-	Camera DC power ground and GPIO signal ground (GND)

Definition of 6-pin power port

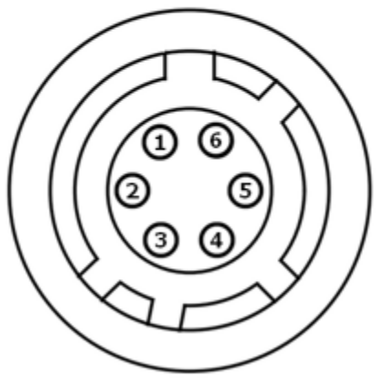
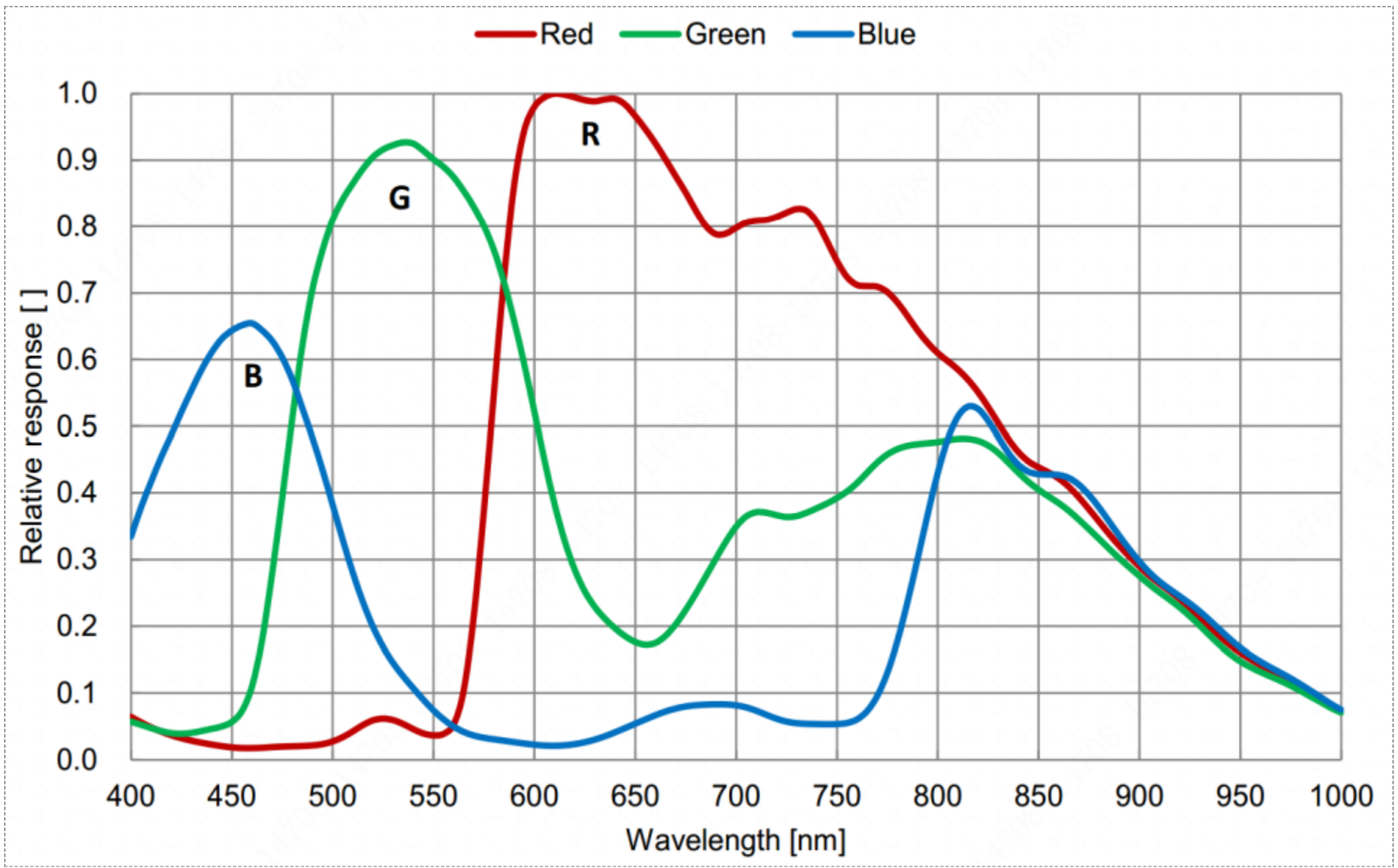
Spectrogram